TRAFFIC CONTROL EQUIPMENT — NAVIGATION AIDS AND ACCESSORIES

FOREWORD

This catalog goes further than just being a product presentation. In addition to product description, it includes pertinent U.S. Coast Guard regulations, engineering data, circuit diagrams, dimensional drawings and other information which you will find helpful in specifying, purchasing and installing the equipment best suited to your need.

Western Industries' Navigation Aids and Accessories for Movable Bridges are designed to meet the requirements of federal, state, county and municipal governments, as well as utilities and industrial applications.

This catalog illustrates the assemblies most commonly used to meet the conditions encountered in the vast majority of locations. However, our engineering department welcomes the opportunity to cooperate in the design of special assemblies to meet unusual conditions. Given scale plans or details of the situations, we will furnish drawings illustrating the arrangement recommended.

We wish to call your attention to the following:

Western Industries, Inc. guarantees the equipment herein against defects in material and workmanship for one year from date of shipment.

We keep a large and complete stock of parts and accessories in inventory, enabling us to make prompt shipment upon receipt of your order.

Thank you for your time in becoming familiar with our products. We welcome the opportunity of serving you.

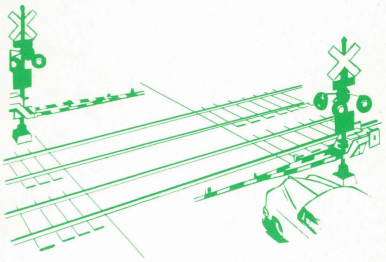

Western Industries is the world's largest manufacturer of automatic gates. Our gate products include railroad crossing gates, bridge gates, security gates and parking gates. Over 20,000 Western gates are in service.

WESTERN INDUSTRIES, INC.
2742 West 36th Place, Chicago, Illinois 60632
Area Code 312 Phone 254-9600

CONTENTS

1 **Front Cover**

2 **Foreword**

3 **Contents**

4 **Pier and Bridge Lights**

4 Type 1 Pier Light
4 Type 1-A Pier Light
4 Type 1-P Pivot-Type Navigation Light
5 Type 2 Pivot-Type Bridge Light
5 Type 3 Stationary-Type Navigation Light
5 Type 5 Drawbridge-Type Light
6 Type 6 Channel Marker
6 Type 6-PSU Pivot-Type Center of Channel Light
6 Type 9 Pivot-Type Navigation Light
7 Type 10 Pivot-Type Navigation Light
7 Type 11 Pivot-Type Center Channel Light
7 Mercury Contact Circuit Controller
7 Auxiliary Lamp Relay

8 **U. S. Coast Guard Specifications**

8 Minimum Lighting Requirements for Fixed Bridges
9 Minimum Lighting Requirements for Double-Opening Swing Bridges
10 Minimum Lighting Requirements for Single-Opening Draw Bridges
11 Minimum Lighting Requirements for Vertical Lift Bridges and Bascule Bridges

12 **NN Electric Traffic Gates**

12 Model 5915 Light-Duty Gates
13 Model 5920 Heavy-Duty Gates
14 NN Gate Installations
15 NN Gate Installations
16 NN Gate Installations
17 NN Gate Installations
18 NN Gate Installations
19 NN Gate Installations

20 **Limit Switches**

20 Two Pole Plunger-Type Limit Switch
21 Four Pole Plunger-Type Limit Switch

22 **Traffic Lights and Neon Stop Signs**

22 Type SL-50-CN Neon Stop Sign
22 Type SL-50-CN-1 Neon Stop Sign
22 Type SL-50-CN-2 Neon Stop Sign
23 Type SL-50 Traffic Light
24 Model XT-1500 T Type Traffic Signal Light

25 **Type 8500 Motorized Horizontal Barrier**

26-27 **Electric Bells, Accessories and Gate Arm Lights**

26 Type 222 Electric Bell
26 Type 1203 Electric Bell
26 Type 555 Electric Bell
27 Mounting Accessories and Gate Arm Lights

28-29 **Median Strip Crossover Gates**

30-31 **Reversible Lane Control Swing Gates**

32 **Vertical Lift Gate**

33 **Electric Security Gate**

34-35 **"Securo-Gate" Turnstiles**

36 **Back Cover**

PIER AND BRIDGE LIGHTS

Western's Electric Pier, Bridge, Fender and Channel Marker lights meet all specifications as set forth by the United States Coast Guard. Close to 50 years experience in this highly specialized field enables us to offer you a complete line of finely engineered, thoroughly proven equipment.

General

Lamp doors are gasketed with sponge rubber and lenses are seated on cork gaskets and sealed with non-hardening plastic compound. The pivot hanger for pivot-type lights has steel shaft with babbitted bearings. Bronze retriever chain is furnished with cast bronze pivot type lights; galvanized retriever chain is furnished with all other pivot-type lights. Bronze springs are furnished on spring suspension type lights.

We welcome your inquiries on "special" types.

Housing

All housings are available in cast aluminum, painted cast iron, galvanized cast iron or cast bronze, as specified.

Lenses

Lenses are the standard marine type, 8 inch—90°, 180° or 360° fresnel—available in red, green, amber and clear, as specified.

Receptacle

All lights are furnished with receptacle for standard medium screw base 100 watt rough service lamp. It is a porcelain receptacle with heavy shell and screw terminals and is rated for 660 watts, 250 volts, alternating current. The receptacle is spring mounted to reduce shock thus reducing lamp changeouts.

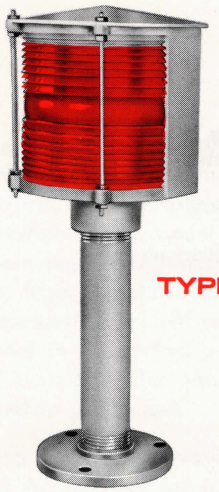

TYPE 1

Pier Light

Used for marking piers, fenders, etc. Normally supplied with 180° red fresnel lens but can be supplied with green, clear or amber lens as required.

When ordering specify the following:

1. Color of lens.
2. Length of dimension "A" (17½" will be furnished unless otherwise specified).
3. Catalog number.

Catalog No.	Description
5901-250 X	Cast Aluminum Housing
5901-250 FX	Cast Iron Housing (Painted Aluminum)
5901-250 F2X	Cast Iron Housing (Galvanized)
5901-250 BX	Cast Bronze Housing

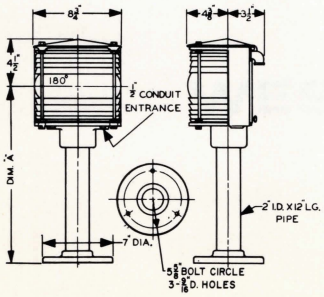

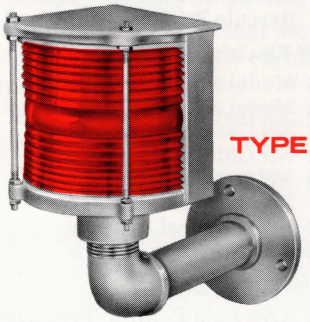

TYPE 1-A

Pier Light

Used for marking center channels, piers, etc. Normally supplied with 180° red fresnel lens but can be supplied with green, clear or amber lens as required.

When ordering specify color of lens and catalog number.

Catalog No.	Description
5901-260 X	Cast Aluminum Housing
5901-260 FX	Cast Iron Housing (Painted Aluminum)
5901-260 F2X	Cast Iron Housing (Galvanized)
5901-260 BX	Cast Bronze Housing

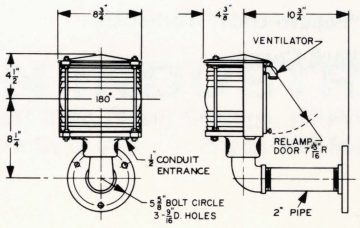

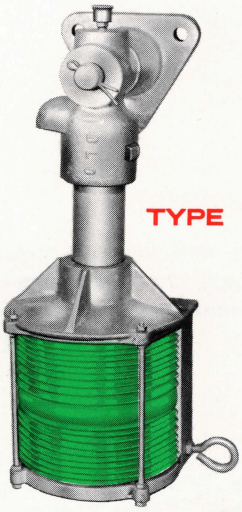

TYPE 1-P

Pivot-Type Navigation Light

Used as pier or channel marker light. Fitted with 8 inch—180° fresnel lens of color specified. Color lenses available are red, green, clear or amber.

When ordering specify the following:

1. Color of lens.
2. Length of dimension "A" (4′ 0″ will be furnished unless otherwise specified).
3. Length of retriever chain, galvanized or bronze. (8′ 0″ long will be furnished unless otherwise specified.)
4. Catalog number.

Catalog No.	Description
5901-251 X	Cast Aluminum Housing
5901-251 FX	Cast Iron Housing (Painted Aluminum)
5901-251 F2X	Cast Iron Housing (Galvanized)
5901-251 BX	Cast Bronze Housing

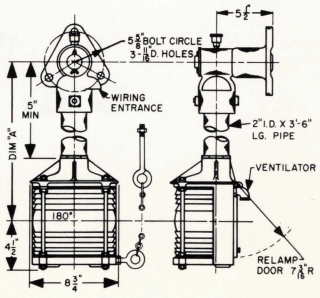

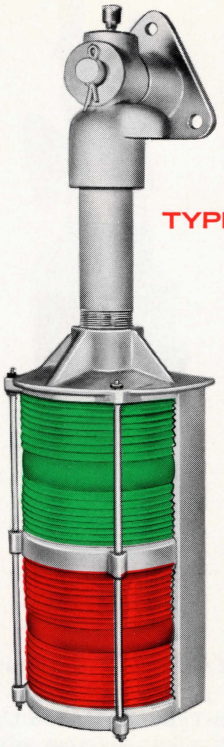

TYPE 2

Pivot-Type Bridge Light

Used on bascule and vertical lift bridges. Normally supplied with 180° red fresnel lens in bottom and 180° green fresnel lens in top but can be supplied in any combination of red, green, clear or amber lenses.

When ordering specify the following:

1. Color of lenses.
2. Length of dimension "A" (4′ 10″ will be furnished unless otherwise specified).
3. Length of retriever chain galvanized or bronze. (8′ 0″ long will be furnished unless otherwise specified.)
4. Catalog number.

Catalog No.	Description
5901-252 X	Cast Aluminum Housing
5901-252 FX	Cast Iron Housing (Painted Aluminum)
5901-252 F2X	Cast Iron Housing (Galvanized)
5901-252 BX	Cast Bronze Housing

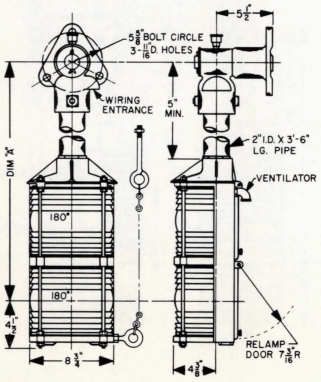

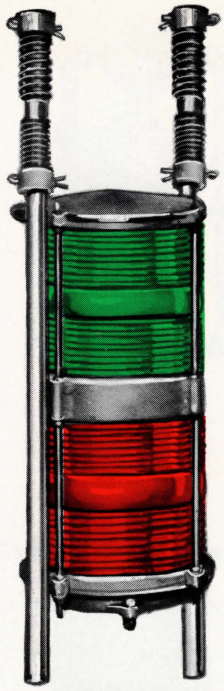

TYPE 3

Stationary-Type Navigation Light

Stationary spring mounted vertical lift or bascule bridge light. Normally supplied with 180° red fresnel lens in bottom and 180° green fresnel in top. Unit can be supplied in any combination of red, green, clear and amber lenses. A platform must be provided for relamping of unit. Support rods and springs are of phosphor bronze.

When ordering specify the following:

1. Color of lenses.
2. Length of dimension "A" (3′ 0″ will be furnished unless otherwise specified).
3. Length of dimension "B" (2′ 6″ recommended, dimension "B" will be 6 inches less than dimension "A").
4. Catalog number.

Catalog No.	Description
5901-253 X	Cast Aluminum Housing
5901-253 FX	Cast Iron Housing (Painted Aluminum)
5901-253 F2X	Cast Iron Housing (Galvanized)
5901-253 BX	Cast Bronze Housing

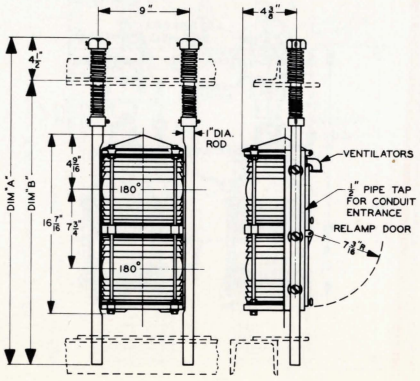

TYPE 5

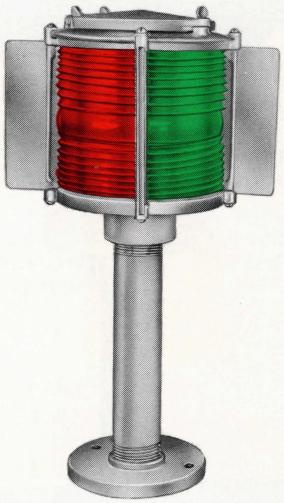

Drawbridge-Type Light

Used on draw spans and similar spans to indicate whether drawbridge is open or closed. Normally supplied with two 90° red and two 90° green fresnel lenses. Blank sections will be supplied if required.

When ordering specify the following:

1. If blank sections are required, specify number of blank sections and color of lenses.
2. Length of dimension "A" (17½″ will be furnished unless otherwise specified).
3. Catalog number.

Catalog No.	Description
5901-205 X	Cast Aluminum Housing
5901-205 FX	Cast Iron Housing (Painted Aluminum)
5901-205 F2X	Cast Iron Housing (Galvanized)
5901-205 BX	Cast Bronze Housing

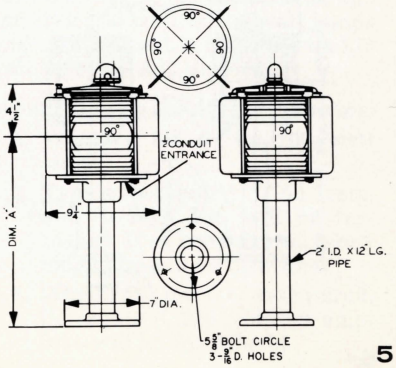

TYPE 6

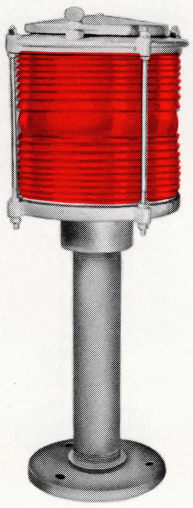

Channel Marker

Used for marking fenders, channels, etc. Can be supplied with 360° red, green, clear or amber fresnel lens as required.

When ordering specify the following:

1. Color of lens.
2. Length of dimension "A" (17½" will be furnished unless otherwise specified).
3. Catalog number.

Catalog No.	Description
5901-206 X	Cast Aluminum Housing
5901-206 FX	Cast Iron Housing (Painted Aluminum)
5901-206 F2X	Cast Iron Housing (Galvanized)
5901-206 BX	Cast Bronze Housing

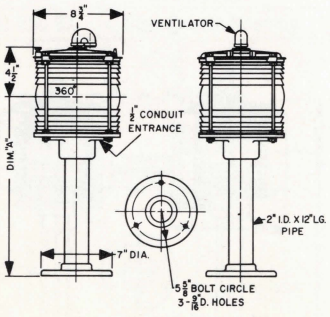

TYPE 6-PSU

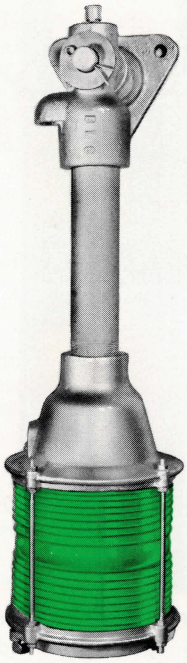

Pivot-Type Center of Channel Light

Use as center of channel marker light. Normally supplied with 360° green fresnel lens but can be supplied with red, clear or amber lens as required.

When ordering specify the following:

1. Color of lens.
2. Length of dimension "A" (4′ 6″ will be furnished unless otherwise specified).
3. Length of retriever chain, galvanized or bronze (8′ 0″ will be furnished unless otherwise specified.)
4. Catalog number.

Catalog No.	Description
5901-208 X	Cast Aluminum Housing
5901-208 FX	Cast Iron Housing (Painted Aluminum)
5901-208 F2X	Cast Iron Housing (Galvanized)
5901-208 BX	Cast Bronze Housing

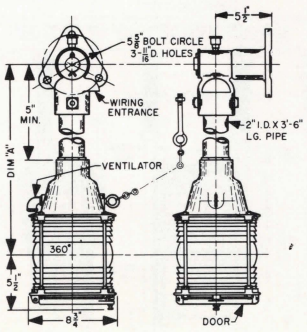

TYPE 9

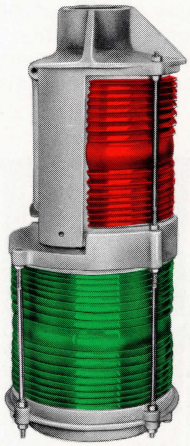

Pivot-Type Navigation Light

Pivot support vertical lift or bascule bridge light. Normally supplied with 180° red fresnel lens in top and 360° green fresnel lens in bottom . . . but can be supplied in any combination of red, green, clear and amber lenses.

When ordering specify the following:

1. Color of lenses.
2. Length of dimension "A" (4′ 10″ will be furnished unless otherwise specified).
3. Length of retriever chain, galvanized or bronze. (8′ 0″ will be furnished unless otherwise specified.)
4. Catalog number.

Catalog No.	Description
5901-267 X	Cast Aluminum Housing
5901-267 FX	Cast Iron Housing (Painted Aluminum)
5901-267 F2X	Cast Iron Housing (Galvanized)
5901-267 BX	Cast Bronze Housing

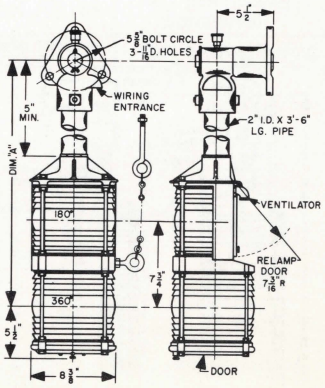

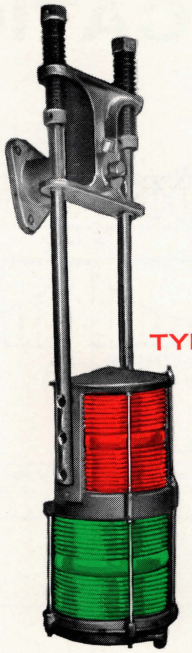

TYPE 10

Pivot-Type Navigation Light

Spring suspension pivot support vertical lift or bascule bridge light. Normally supplied with 180° red fresnel lens in top and 360° green fresnel lens in bottom . . . but can be supplied in any combination of red, green, clear and amber lenses. Support rods are 1 inch diameter phosphor bronze.

When ordering specify the following:

1. Color of lenses.
2. Length of dimension "A" (4′ 10″ will be furnished unless otherwise specified).
3. Length of retriever chain, galvanized or bronze. (8′ 0″ will be furnished unless otherwise specified.)
4. Catalog number.

Catalog No.	Description
5901-270 X	Cast Aluminum Housing
5901-270 FX	Cast Iron Housing (Painted Aluminum)
5901-270 F2X	Cast Iron Housing (Galvanized)
5901-270 BX	Cast Bronze Housing

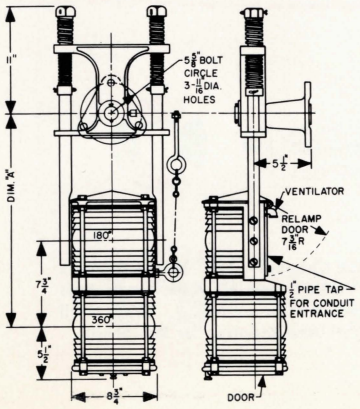

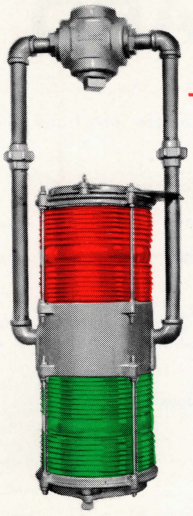

TYPE 11

Pivot-Type Duplex Center Channel Light

Used as center channel marker light. Normally supplied with two 360° green fresnel lens, but can be furnished with any combination of red, clear and amber. This navigation light can be supplied with a light out relay, where one lamp burns out the other automatically lights up.

When ordering specify the following:

1. Color of lenses.
2. Length of dimension "A" (5′ 2″ will be furnished unless otherwise specified).
3. Length of retriever chain, galvanized or bronze (8′ 0″ long chain will be furnished unless otherwise specified).
4. Light out relay if required. (Specify wattage of lamps to be used.)
5. Catalog number.

Catalog No.	Description
5901-476 X	Cast Aluminum Housing
5901-476 FX	Cast Iron Housing (Painted Aluminum)
5901-476 F2X	Cast Iron Housing (Galvanized)
5901-476 BX	Cast Bronze Housing

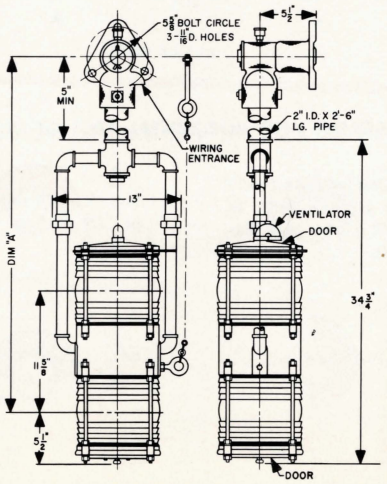

MERCURY CONTACT CIRCUIT CONTROLLER

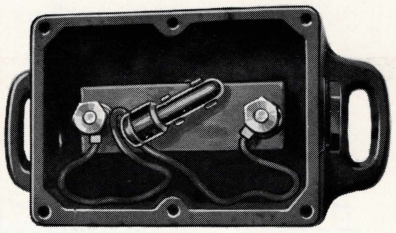

Type 1005-101 equipped with one mercury switch used for controlling red warning lights on gate arms.

Type 1005-101X equipped with two mercury switches used for controlling Models 2, 3, 9 and 10 red and green channel lights.

AUXILIARY LAMP RELAY

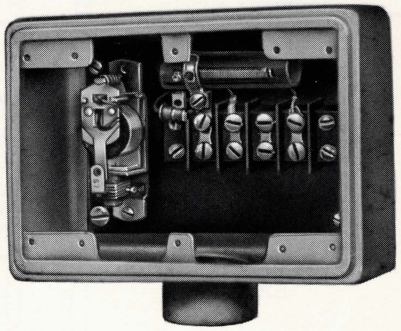

This relay is used with Models 2, 3 or 10 bridge lights having both fresnel lenses the same color. It will transfer the light from the upper lamp to the lower lamp should the lamp filament in the upper lamp burn out.

It can be mounted on the lamp or in the conduit run to the lamp.

The housing is of cast aluminum with gasketed weatherproof cover. It is available with one hub for mounting on the lamp or two hubs for mounting in the conduit run and for either 60 watt or 100 watt lamps and can be fused. It is for use on 115 volt, 60 cycle A.C. service.

When ordering specify the following:

1. Whether for 60 or 100 watt lamps.
2. Type of mounting. If on lamp, one 3/4 inch hub will be furnished. If in conduit run, two 1 inch hubs will be furnished.
3. Whether or not fuse is required. (If required, 250 volt, 10 amp. fuse will be furnished.)

U.S. COAST GUARD SPECIFICATIONS

FIXED BRIDGES MINIMUM LIGHTING REQUIREMENTS

Single-Span Fixed Bridge

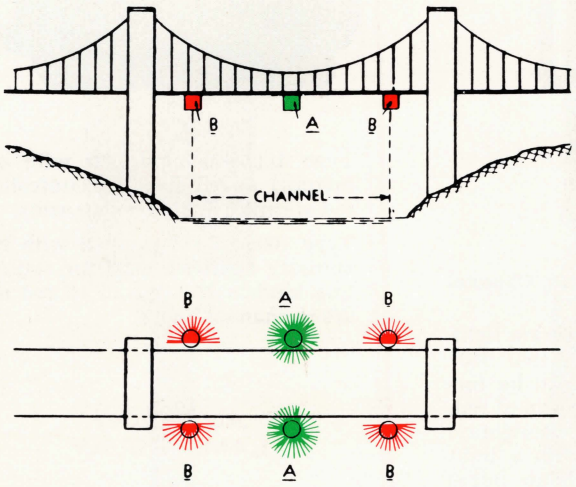

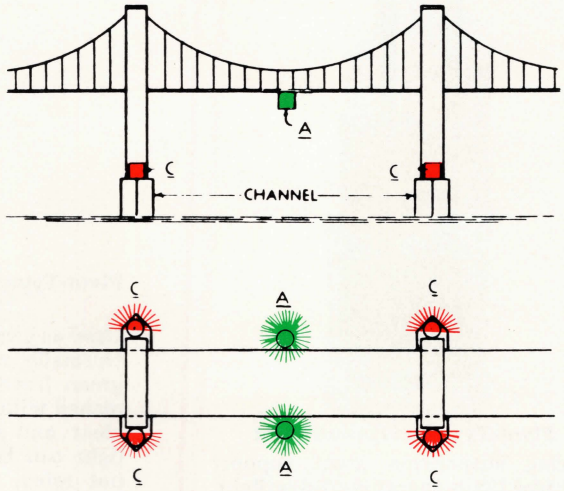

Multiple-Span Fixed Bridge

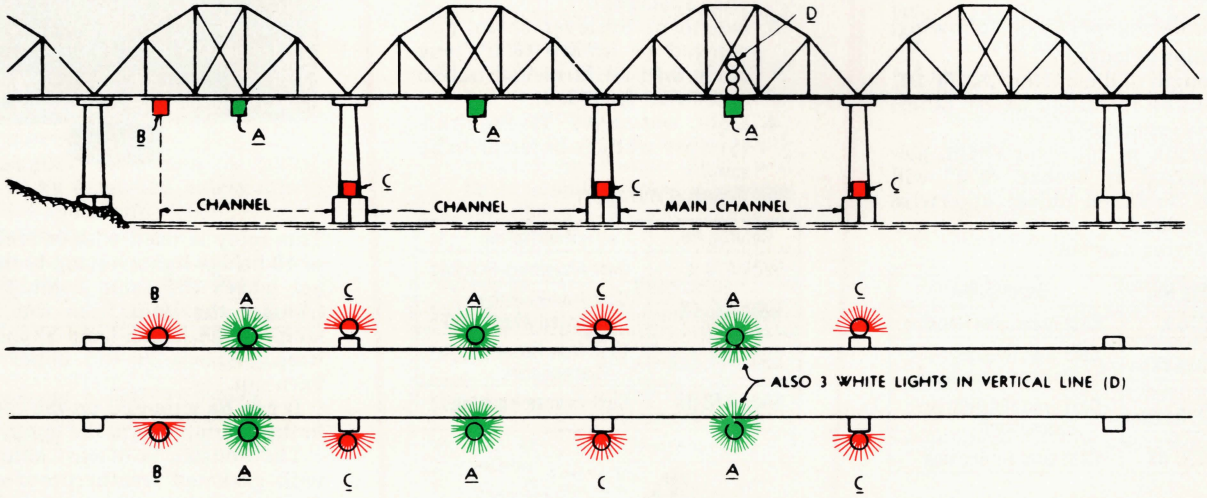

LIGHT COLORS AND HORIZONTAL ARCS OF VISIBILITY

A

Channel Center—360° Green (180° Green on Bridges Lighted Prior to Jan. 1, 1947, Until Lights Are Repaired or Replaced).

C

Pier—180° Red.

B

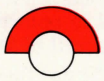

Channel Margin—180° Red.

D

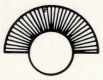

Main Channel—180° White, 3 Lights in Vertical Line (60°-180° on Bridges Lighted Prior to Jan. 1, 1953, Until Lights Are Repaired or Replaced).

DOUBLE-OPENING SWING BRIDGES MINIMUM LIGHTING REQUIREMENTS

Through Bridge

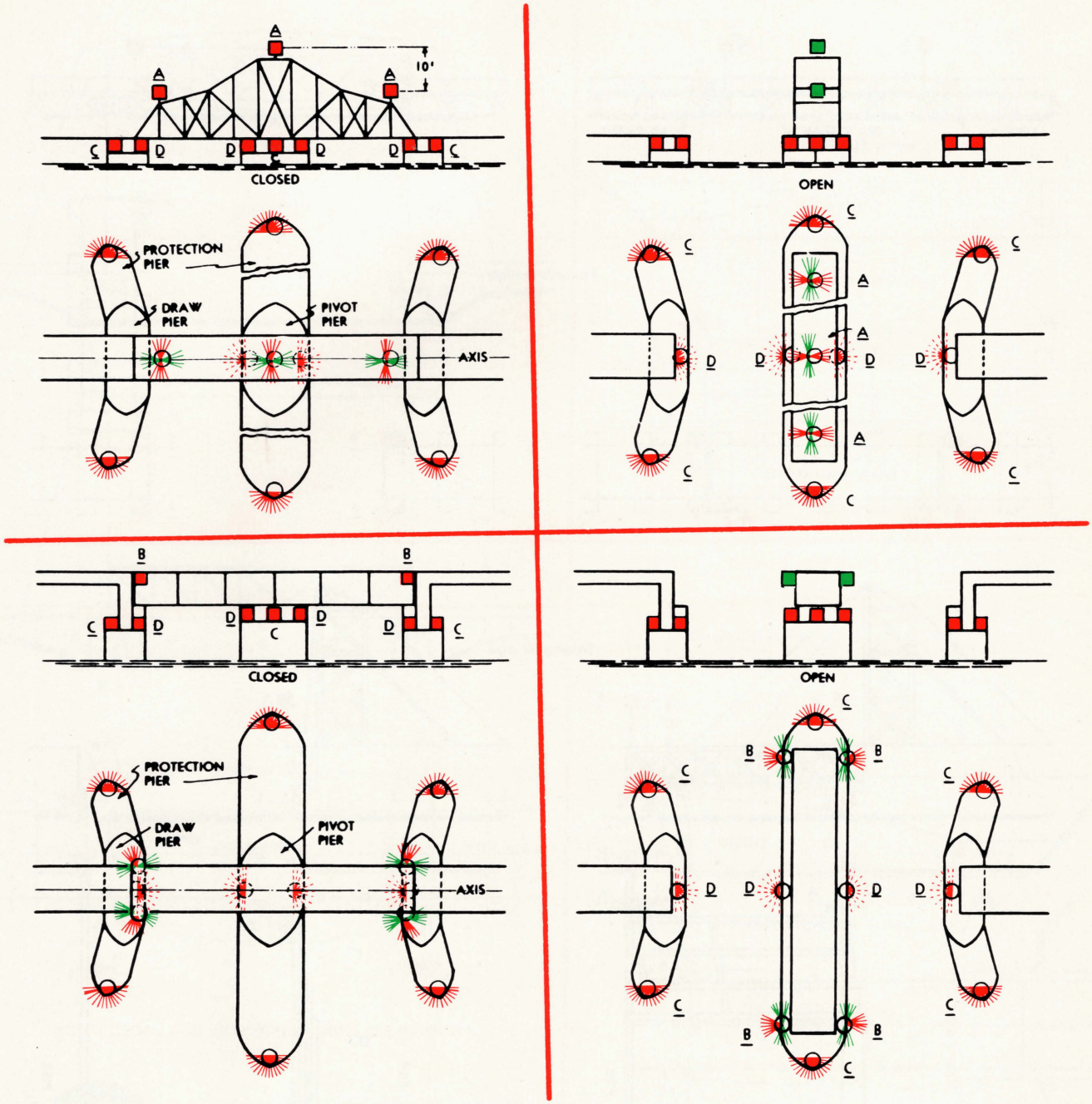

Deck Bridge

LIGHT COLORS AND HORIZONTAL ARCS OF VISIBILITY

A

Swing Span—Alternate Red (2) and Green (2). Each 60° and at 90° to Each Other.

B

Swing Span—Alternate Red (1) and Green (2). Each 60° and at 90° Between Red and Green.

C

Pier—180° Red.

D

Axis—180° Red. May Be Omitted When Draw and Protection Piers Are Straight on Their Channel Faces.

SINGLE-OPENING DRAW BRIDGES MINIMUM LIGHTING REQUIREMENTS

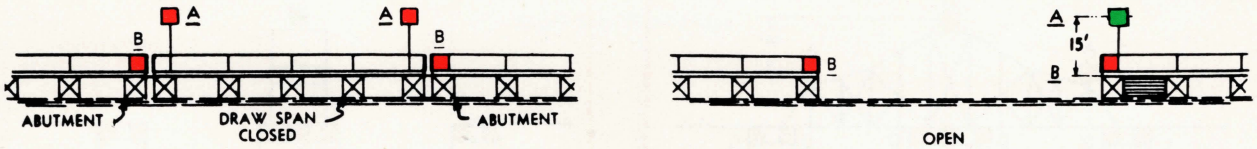

Pontoon Bridge

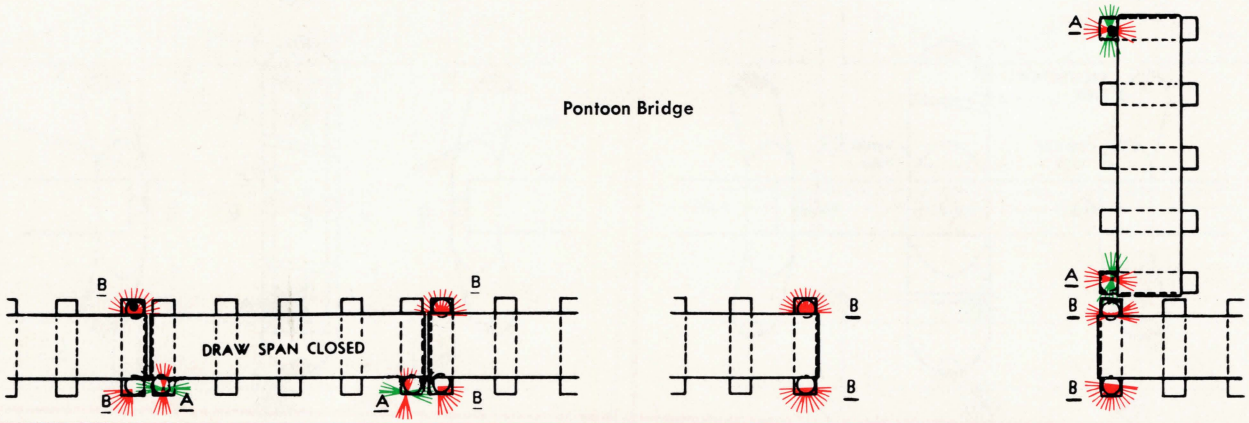

Folding Bridge

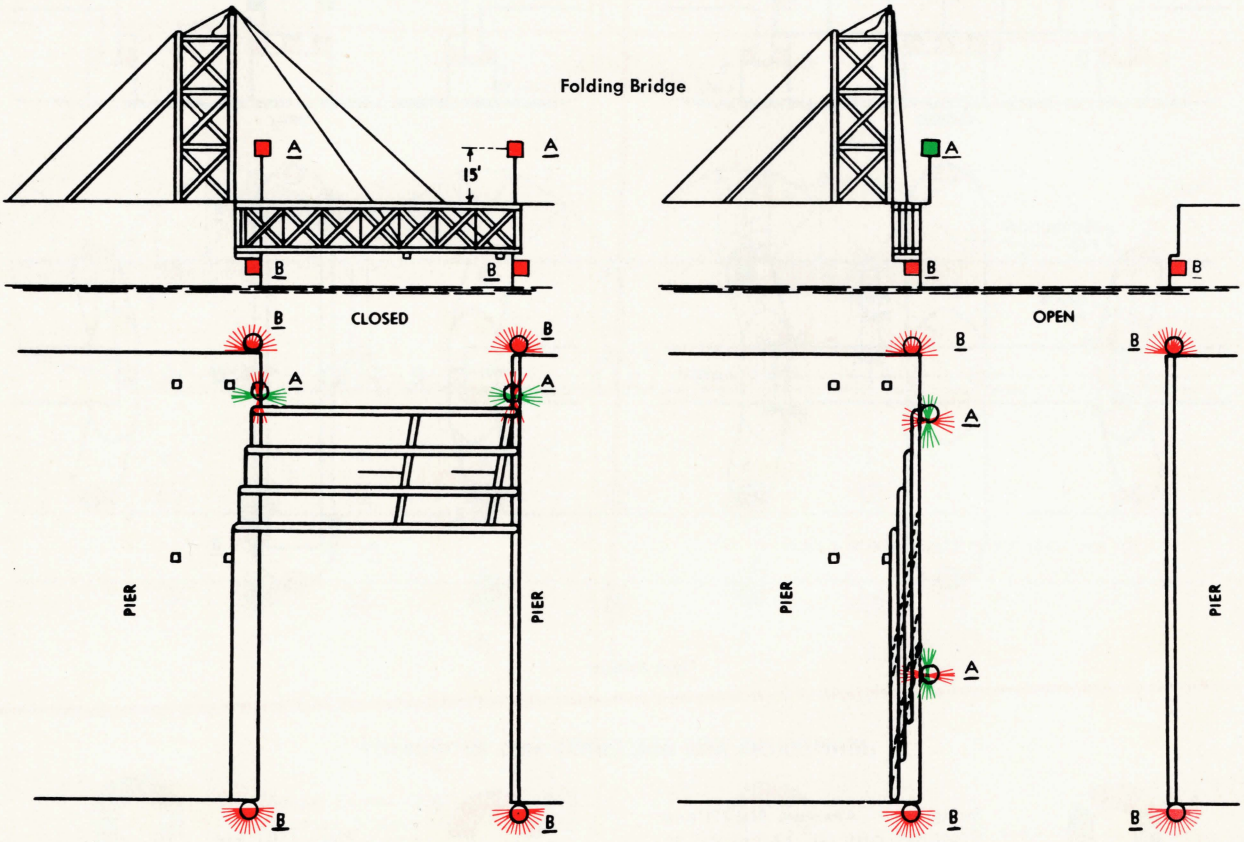

LIGHT COLORS AND HORIZONTAL ARCS OF VISIBILITY

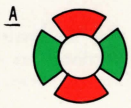

Draw Span—Alternate Red (2) and Green (2), Each 60° and at 90° to Each Other.

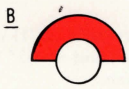

Pier or Abutment—180° Red.

VERTICAL LIFT BRIDGE
Minimum Lighting Requirements

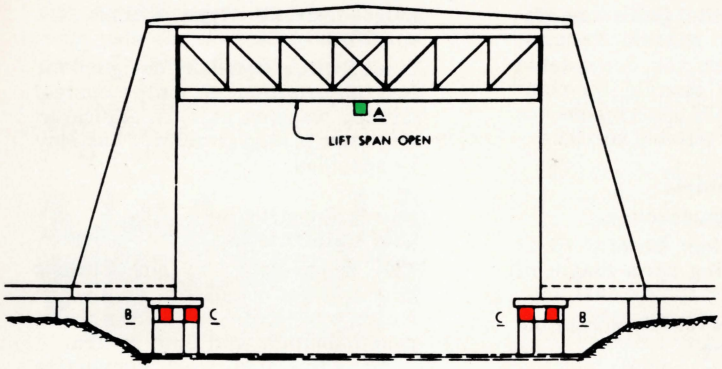

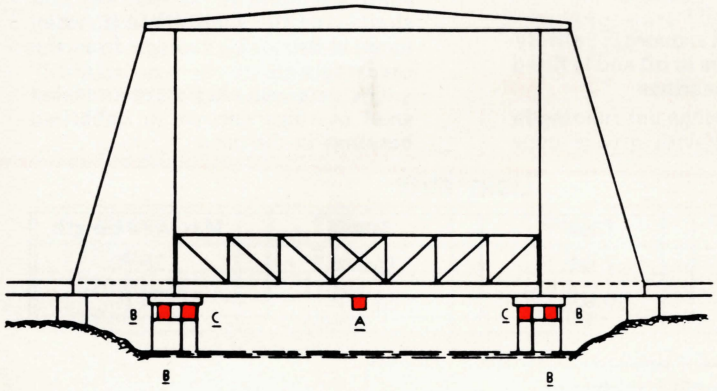

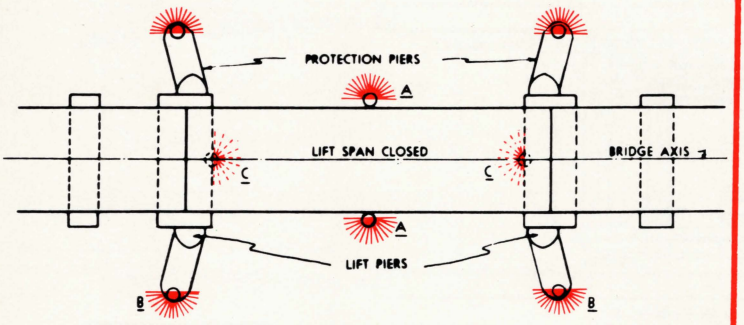

LIGHT COLORS AND HORIZONTAL ARCS OF VISIBILITY

A

Lift Span—360° Green When Lift Span Fully Open for Navigation, 180° Red for All Other Positions of Lift Span (180° Green and Red Permitted Until Lights are Repaired or Replaced).

B

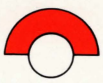

Pier—180° Red.

C

Axis—180° Red. May Be Omitted When Lift and Protection Piers are Straight on Their Channel Faces.

BASCULE BRIDGES MINIMUM LIGHTING REQUIREMENTS

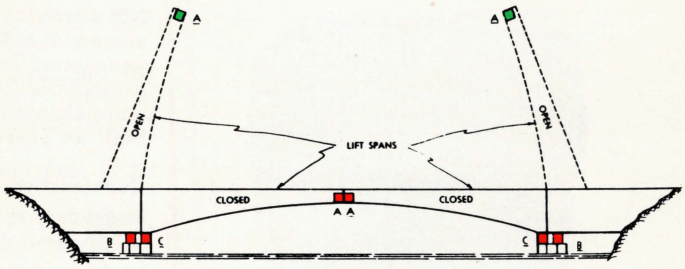

Double-Lift Bridge

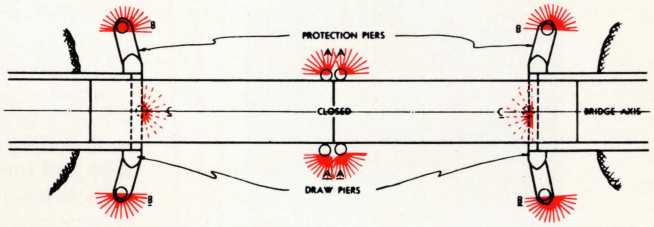

Single-Lift Bridge

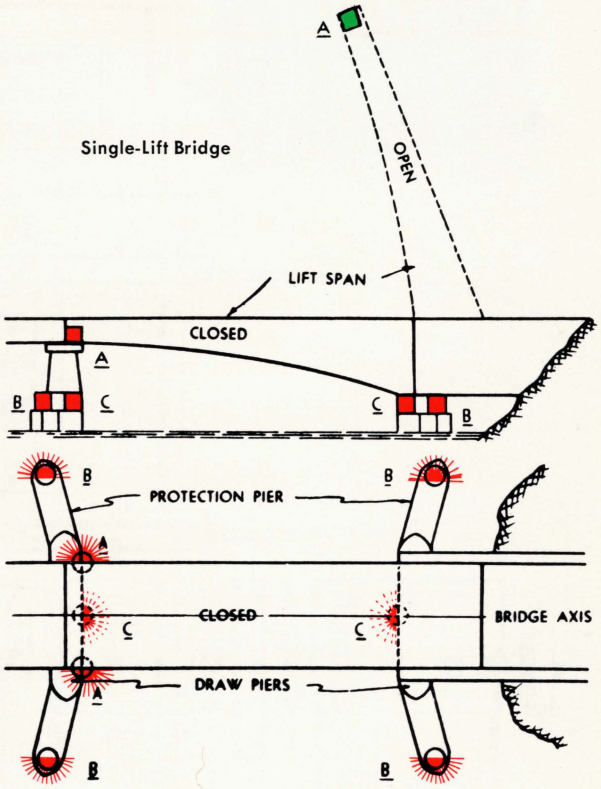

LIGHT COLORS AND ARCS OF VISIBILITY

A

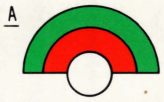

Lift Span—180° Green When Lift Span is Fully Open for Navigation, 180° Red for all Other Positions of Lift Span (60° or Less Green and Red Permitted on Bridges Lighted Prior to Jan. 1, 1949, Until Lights are Repaired or Replaced).

B

Pier—180° Red.

C

Axis—180° Red. May Be Omitted When Draw and Protection Piers Are Straight on Their Channel Faces.

NN ELECTRIC

LIGHT-DUTY GATE
MODEL 5915

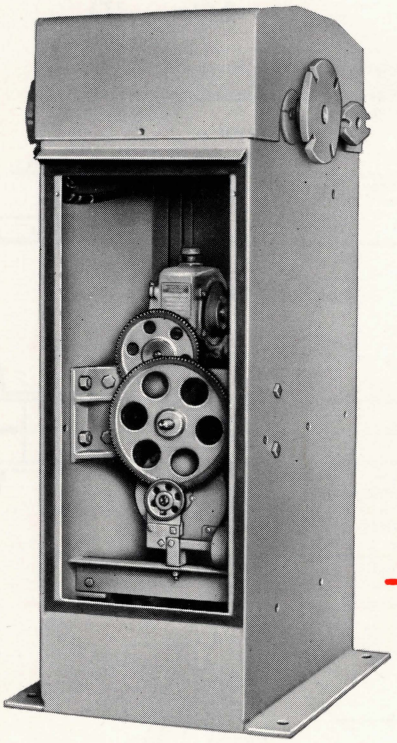

NN Electric Traffic Gates are designed for fast, reliable 24-hour, year-round service and dependable protection. They operate on commercial current. NN mechanisms are built for years of reliable service.

Construction Features

Rugged, heavy construction.

Speed of operation: From 7 to 13 seconds, depending upon length of gate arm.

All working parts readily accessible for rapid servicing.

Motor: Heavy industrial, may be reversed instantly at any intermediate position of gate arm.

Worm gear speed reducer is entirely enclosed, operates in oil and is fitted with ball thrust bearings.

Lubrication: Bearings not running in oil are provided with grease cups unless Alemite type fittings are specified.

Limit Switch: Specially designed for *fast interrupting of motor control* circuit, warning signals, indicator, and interlocking circuits . . . as may be specified.

Sturdy Construction — Low Maintenance

The mechanism for NN Electric Traffic Gates consists of an electric motor, a train of spur gears, a worm gear reduction, and limit switch.

An adjustable steel connecting rod links a crank on the worm gear shaft to a crank on the roadway arm shaft—and the sidewalk arm, when used, is driven by linkage from the roadway arm.

The gate arm shafts are annealed steel castings carried in babbitted bearings in the case.

LIGHT DUTY

Model	Time	Motor	Max. Arm Length
5915-NN-7	7 sec.	½ h.p.	18 ft.
5915-NN-9	9 sec.	½ h.p.	23 ft.

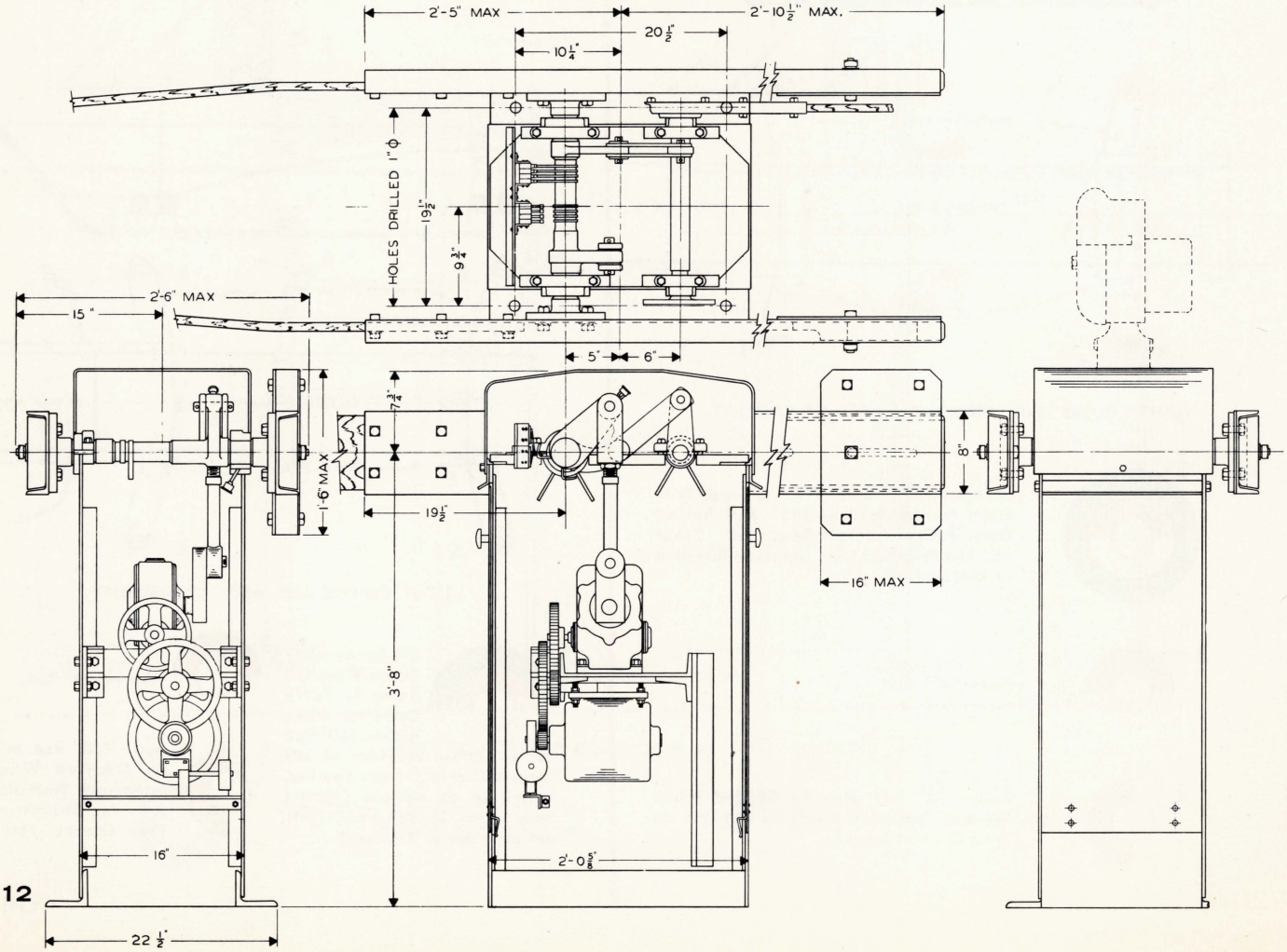

TRAFFIC GATES

A hand crank is furnished with each gate for manual operation in case of power failure.

NN GATES MEET ALL FEDERAL AND STATE SPECIFICATIONS AND SAFETY REQUIREMENTS

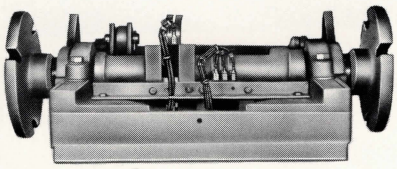

LIMIT SWITCH

NN TRAFFIC GATES are engineered for your requirements. Specifications are given in the insert which is included with this catalog.

When writing for prices, please give us the following information:

1. Electric service available for motor: D.C. or A.C., voltage, frequency and number of phases.
2. Length of roadway arm to be used.
3. Length of sidewalk arm, if any.
4. Angle of travel desired: 75° or 90°.
5. Number of warning lights required on each gate arm.
6. Whether or not bell is required on cover.
7. Special circuits required through limit switch: interlocking, gate lighting, indicator lights.

HEAVY-DUTY GATE MODEL 5920

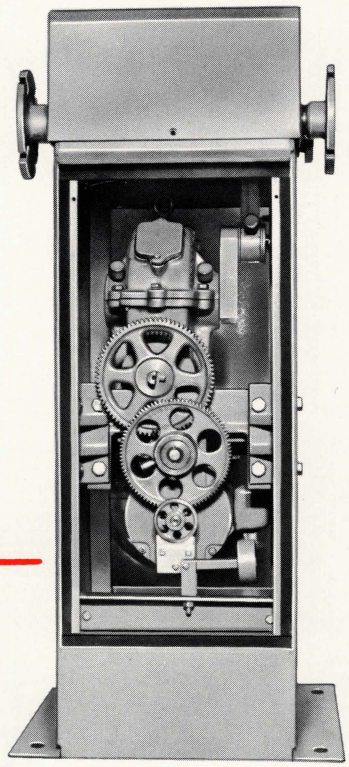

HEAVY DUTY

Model	Time	Motor	Max. Arm Length
5920-NN-9	9 sec.	½ h.p.	30 ft.
5920-NN-11	11 sec.	½ h.p.	35 ft.
5920-NN-13	13 sec.	¾ h.p.	50 ft.

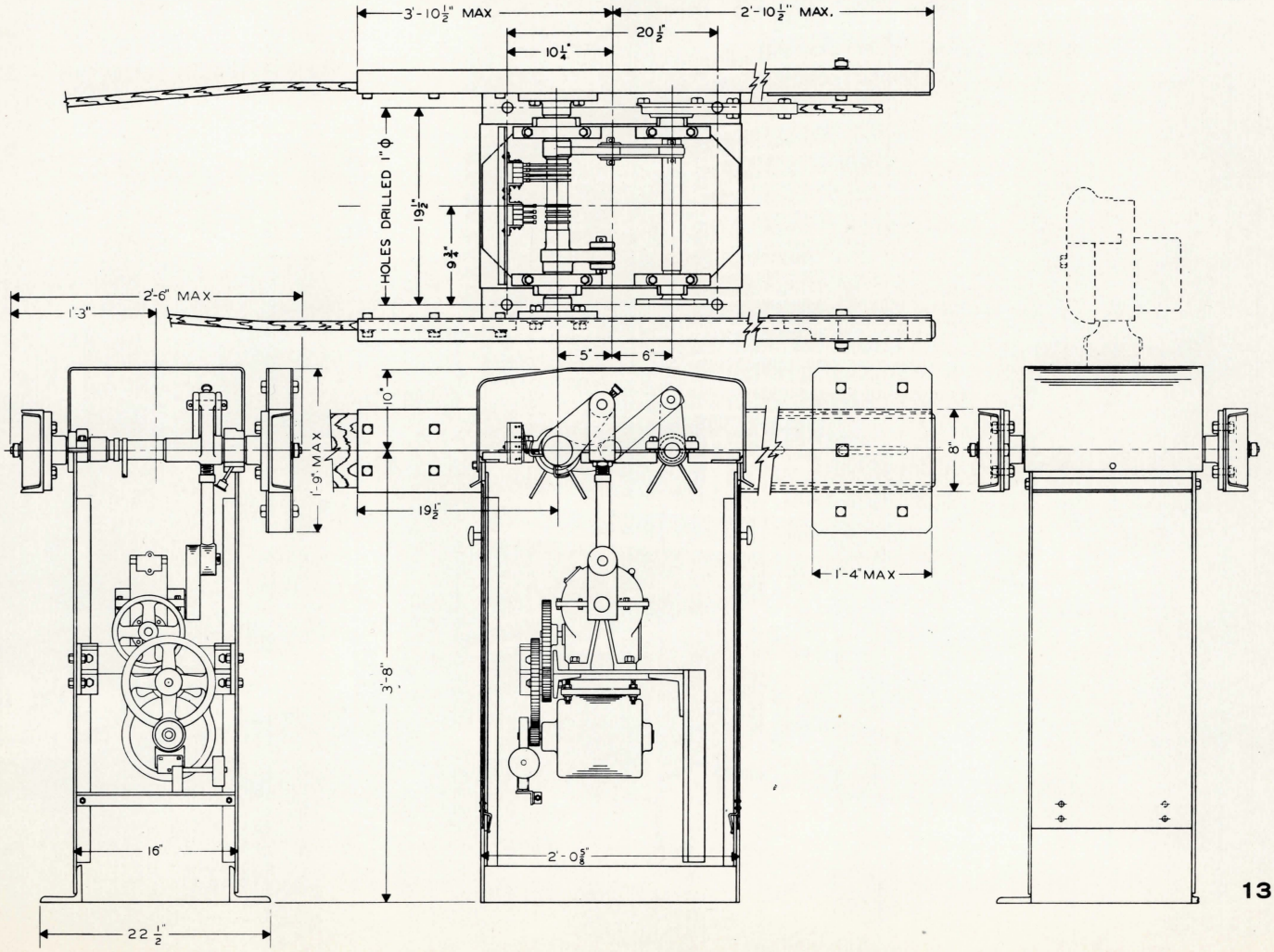

a record of reliability

OVER 5,000 NN BRIDGE GATES IN SERVICE

Safety at work. NN Gates are the recognized approach to bridge crossing protection. Each year, there has been greater acceptance of Western bridge equipment—with installations in most every State in the U.S.; in Canada; in Australia and in South America.

Here is a partial listing of installations:

ALABAMA
Fairfield, 34th St. Crossing
Birmingham & Southern R.R.

ARIZONA
Ajo, Phelps Dodge Corp.

CALIFORNIA
Alameda, San Leandro Bay Farm Island Bridge, Posey Tube
El Segundo, Douglas Aircraft Co.
Knights Landing, Sacramento River Bridge
Point Magu, U.S. Naval Air Missile Center

COLORADO
Colorado Springs, Cheyenne Mountain Zoo

DELAWARE
Seaford, Lewis Bridge

FLORIDA
Fort Lauderdale, S.W. 4th Ave. Bridge
Miami, 36th St. Bridge
S.E. 4th Ave. Bridge
Palm Beach, Boca Raton Inlet Bridge
Pensacola, Santa Rose Sound Bridge
Sarasota County, Lemon Bay Bridge
Tampa, Columbus Drive Bridge
Titusville, Indian River Bridge
West Palm Beach, Delray Beach Bridge

HAWAII
Honolulu

IDAHO
Pocatello, Food Machinery & Chemical Corp.

ILLINOIS
Chicago,
Adams St. Bridge
Ashland Ave. Bridge
Damen Ave. Bridge
Dearborn St. Bridge
Diversey Ave. Bridge
Eisenhower Expressway Bridge
Harrison St. Bridge
Jackson Blvd. Bridge
Madison St. Bridge
Monroe St. Bridge
North State St. Bridge
Randolph St. Bridge
South Canal St. Bridge
100th St. Bridge
106th St. Bridge
Joliet, 105th St. Bridge
Lockport, 9th St. Bridge
Rockford, Forest Hills Road

INDIANA
East Chicago, Canal St. Bridge
LaPorte, Allis Chalmers Co.

KENTUCKY
Covington, Sohio Petroleum
Louisville

LOUISIANA
Empire, Doullut Canal Bridge
Jefferson Parish, Wagner Ferry Bridge
LaFourche Parish,
Cote Blanche Bridge
Cut Off Bridge
Kraemer Bridge
Valentine Bridge

MARYLAND
Baltimore,
Pennington Ave. Bridge
Stoney Creek Bridge

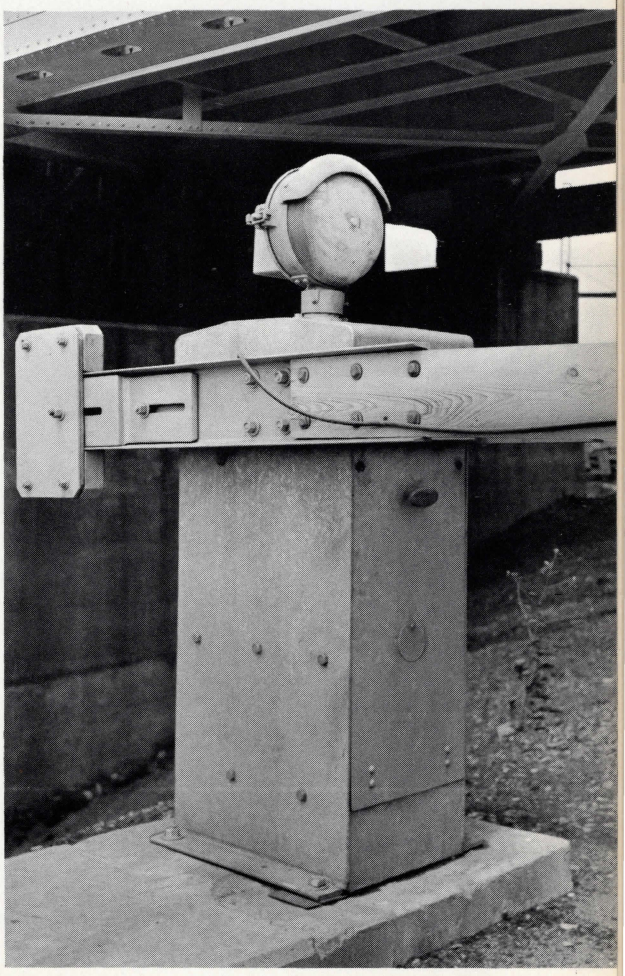

NN GATES...FOR A LIFETIME OF

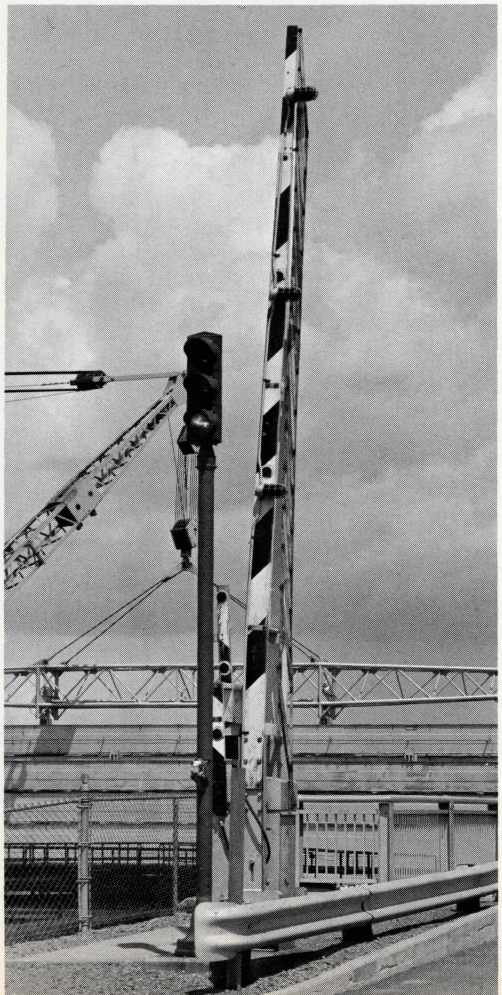

MARYLAND—Continued
Benedict, Patuxtant River Bridge
Denton, Choptank River Bridge
Kent Island, Kent Island Bridge
Salisbury, Wicomico River Bridge
Towson, Wise Ave. Bridge

MASSACHUSETTS
Quincy, Long Island Viaduct
Winchester,
Boston & Maine R.R. Crossing

MICHIGAN
Alpena, 2nd Ave. Bridge
Bay City, Belinda St. Bridge
Cass St. Bridge
Charlevoix, Argo Milling Co.
Detroit, Senders & West Fort St.
Manistee, Maple St. Bridge
Melvindale
Saginaw, Johnson St. Bridge
St. Joseph, Blossom Time Bridge

MINNESOTA
Duluth, Lake Ave. Bridge

MISSOURI
St. Louis, National Lead Co.

NEW JERSEY
Atlantic City,
Beach Thoroughfare Bridge
Barber, California Oil Co.
Bayonne,
Tide Water Associated Oil Co.
Belman, Shark River Bridge
Elizabeth,
Shrewsbury River Bridge
Longport, Ocean City Bridge

NEW JERSEY—Continued
Morgan,
Cheesequake Creek Bridge
Perth Amboy,
Raritan River Bridge
Salem, Salem (Pa. Neck) Bridge
Wildwood, Grassy Sound Bridge

NEW MEXICO
Los Alamos

NEW YORK
Bronx,
Eastern Blvd. Bridge
Pelham Bridge
Willis Ave. Bridge
Brooklyn, B. & O. R.R. Bridge
Buffalo,
Michigan Ave. Lift Bridge
South Park Bridge
Cohoes, 112th St. Bridge
Long Island,
Jones Beach Parkway Bridge
New Rochelle, Glen Island Bridge
New York, Broadway Bridge
Harlem River Bridge
Hutchinson River Pkwy. Bridge
Kennedy International Airport
La Guardia Field

OHIO
Cleveland, Willow Ave. Bridge
Lorain,
Gallion St. Crossing,
N. & W. Ry.
Toledo, Ash Consaul St. Bridge
Cherry St. Bridge

DEPENDABLE PERFORMANCE

OREGON
Bandon,
New Coquille River Bridge
Portland

PENNSYLVANIA
Philadelphia, Reedy St. Bridge
Summit St. Bridge

TEXAS
Beaumont,
Magnolia Petroleum Co.
Kemah, Cleer Creek Bridge
Orange County,
Cow Bayou Bridge
Port Isabel,
Padre Island Causeway
Rio Hondo,
Arroyo Colorado Bridge

VIRGINIA
Norfolk, Elizabeth River Bridge
Norfolk County,
North Landing Bridge
Yorktown,
U.S. Naval Weapons Station
York River Bridge

WASHINGTON
Aberdeen, Heron St. Bridge
Everett,
New Snohomish River Bridge
Marysville,
Steamboat Slough Bridge
Mount Vernon,
Skagit River Bridge
Seattle, Ballard Bridge

WEST VIRGINIA
South Charleston,
Carbide & Carbon Chemical Co.

WISCONSIN
Ellsworth
Green Bay
Manitowac, 10th St. Bridge
Menasha, Racine St. Bridge
Milwaukee, Juneau Ave. Bridge
Oshkosh, Butte Des Morts Bridge
Wauwatosa
Waupaca
West Allis,
Allis Chalmers Mfg. Co.

WYOMING
Atlantic City

AUSTRALIA
Lithgow

BERMUDA
Fort Bell,
Long Bird Hamilton Island
Causeway Bridge

CANADA
Asbestos, Que., Canadian
Johns-Manville Co., Ltd.
Chatham, Ont., Third St. Bridge
Hamilton, Ont.,
Burlington Canal Lift Bridge
Lachine, Que., Black Bridge
Montreal, Que.,
St. Lawrence Seaway
Newfoundland,
Placentia Lift Bridge
Vancouver, B.C., Pine St. Bridge
Wallace Burg, Ont.,
Dominion Bridge Co.

MEXICO
Monterrey, N.L.,
Cerveceria Cuauhtemoc S.A.

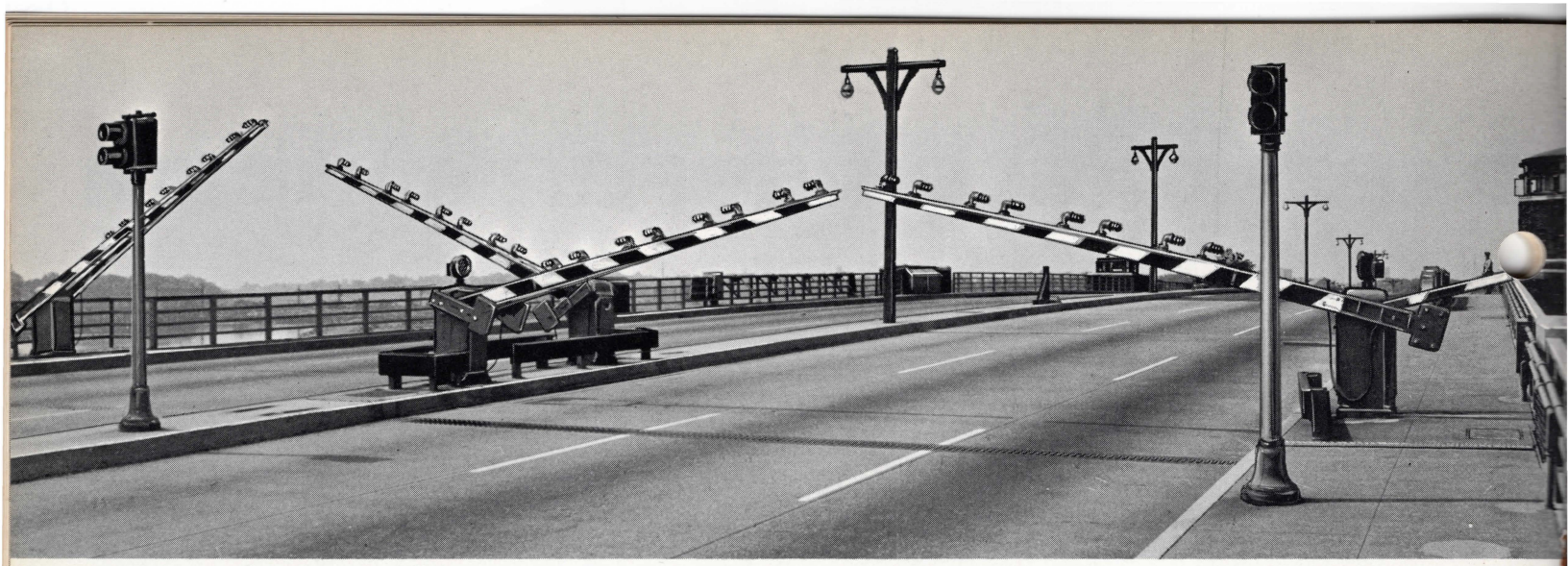

NN GATES...ALWAYS ON GUARD

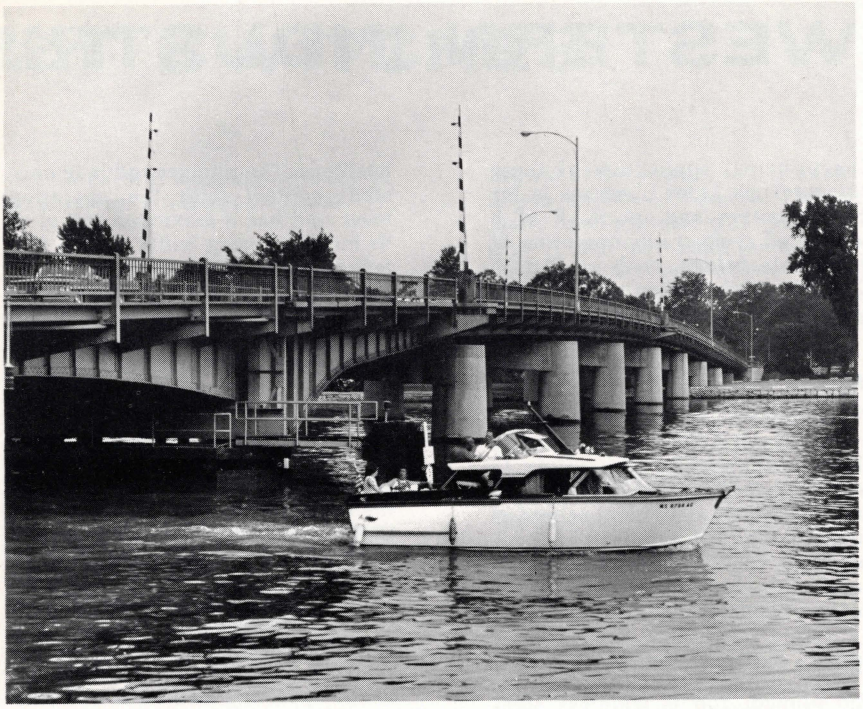

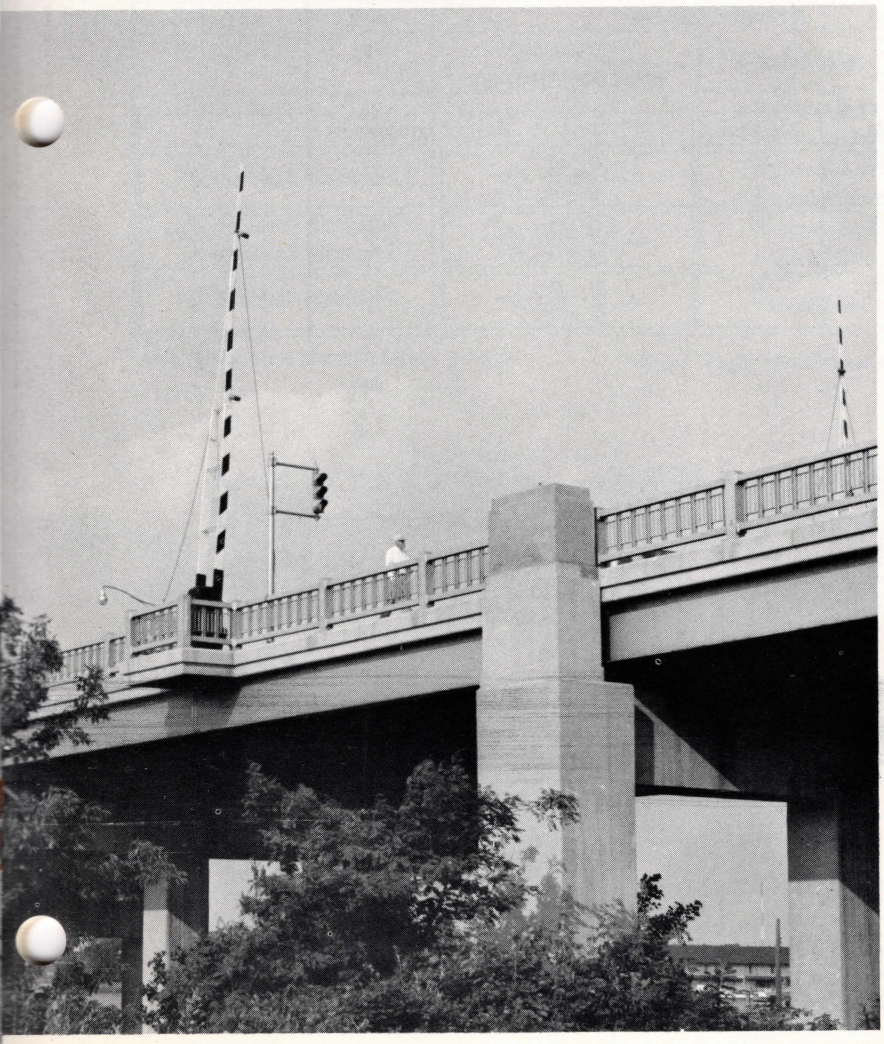

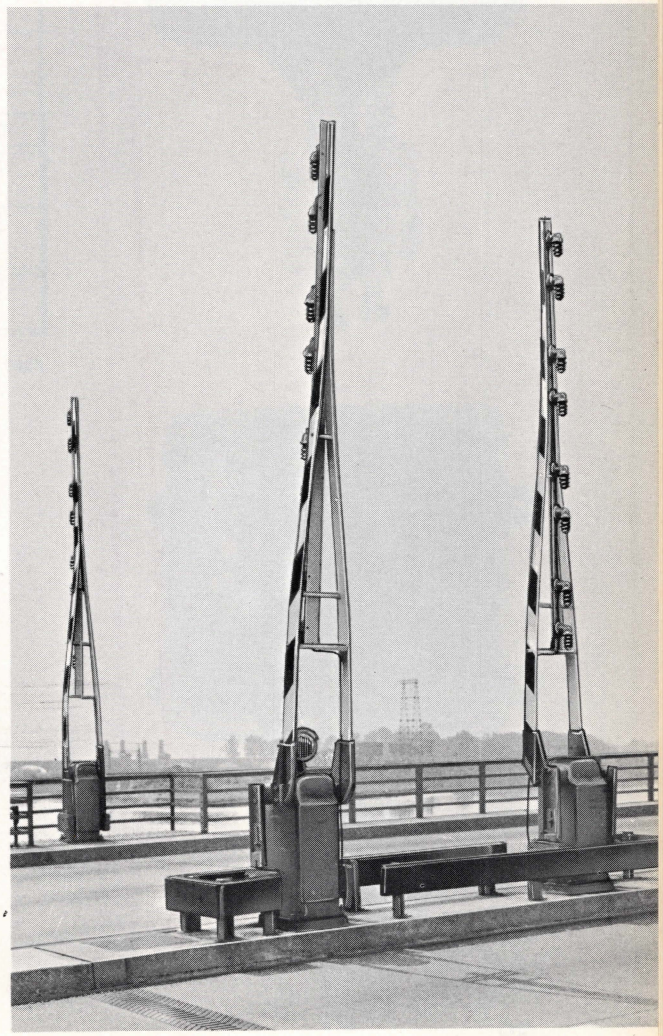

WESTERN INDUSTRIES

TWO POLE PLUNGER TYPE

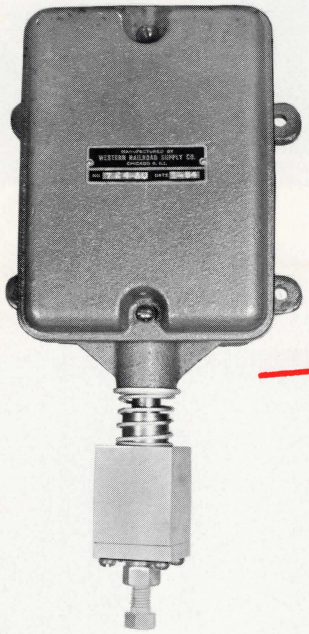

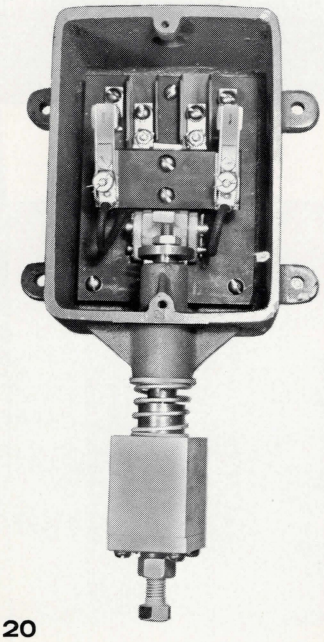

The principal application of these Plunger-Type Limit Switches is for the indication and interlock of a completed cycle or any operation of a movable bridge, such as FULLY CLOSED. Other applications are numerous.

Housing

The cast iron housing and cover are protected with a coat of iron-oxide chromate primer. The cover is sealed to the housing with a neoprene gasket and captive cover bolts, making it weatherproof. Four mounting lugs are cast as integral parts of the housing, with holes for 3/8 inch diameter mounting bolts.

Plunger Rod and Buffer Assembly

The plunger rod is stainless steel and machined to operate with oilite bushings. The plunger rod is in constant contact with the operating lever and has a maximum travel of 1/2 inch. A spring buffer device fastened to the plunger rod provides for an additional 1/2 inch of overtravel motion after the switch has been fully operated, thus relieving undue strain on the internal switch mechanism.

Switch Mechanism

The switch mechanism is a subassembly consisting of stationary contacts, terminals, terminal barriers, operating lever and trip pawl fastened to a 3/4 inch ebony asbestos panel, mounted in the base of the housing. The movable contacts are mounted on a finger board of 1/2 inch thick ebony asbestos and fastened to the operating lever. The contacts

ORDERING REFERENCE

Catalog No.	Model	Contact Arrangement	
5907-211B	AU		2 Normally Open Poles
5907-212B	BU		1 Normally Open and 1 Normally Closed Poles
5907-213B	CU		2 Normally Closed Poles

Shipping Weight Approximately 30 lbs. each

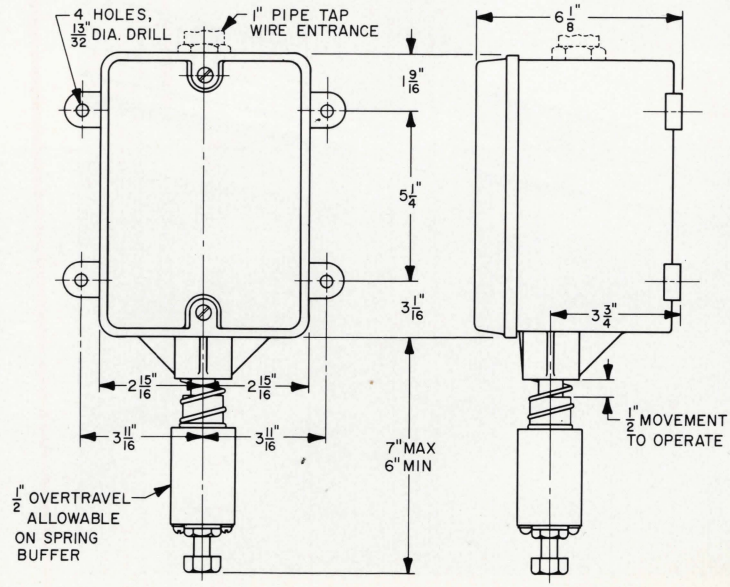

LIMIT SWITCHES

FOUR POLE PLUNGER TYPE

have a current carrying capacity of 30 amperes, alternating current.

Contacts

Plunger limit switches can be furnished in *normally open contacts, normally closed contacts* or *a combination of both*. The movement of the plunger limit switch is as follows: Within the first 1/4 inch depression of the plunger rod the normally closed contacts will open and within the next 1/8 inch travel (a total of 3/8 inch) the normally open contacts will close. In the remaining 1/8 inch of travel, the moving contacts are mechanically locked in their respective positions. This sequence of operation forms a break before making contact. Upon withdrawal of the plunger rod, the above action applies in reverse. The normally open contacts will open in the first 1/4 inch travel and the normally closed contacts will close at 3/8 inch travel, with the remaining movement returning them to their normal position.

When ordering specify the following:

1. Catalog Number
2. Model
3. Contact Arrangement

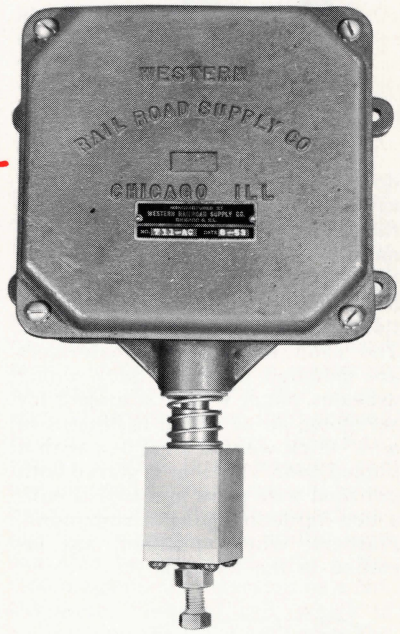

ORDERING REFERENCE

Catalog No.	Model	Contact Arrangement	
5907-214B	AA		4 Normally Open Poles
5907-215B	AB		3 Normally Open and 1 Normally Closed Poles
5907-216B	AC		2 Normally Open and 2 Normally Closed Poles
5907-217B	BC		1 Normally Open and 3 Normally Closed Poles
5907-218B	CC		4 Normally Closed Poles

Shipping Weight Approximately 45 lbs. each

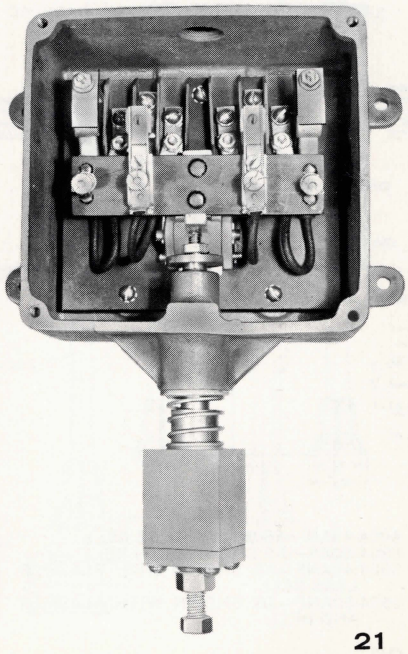

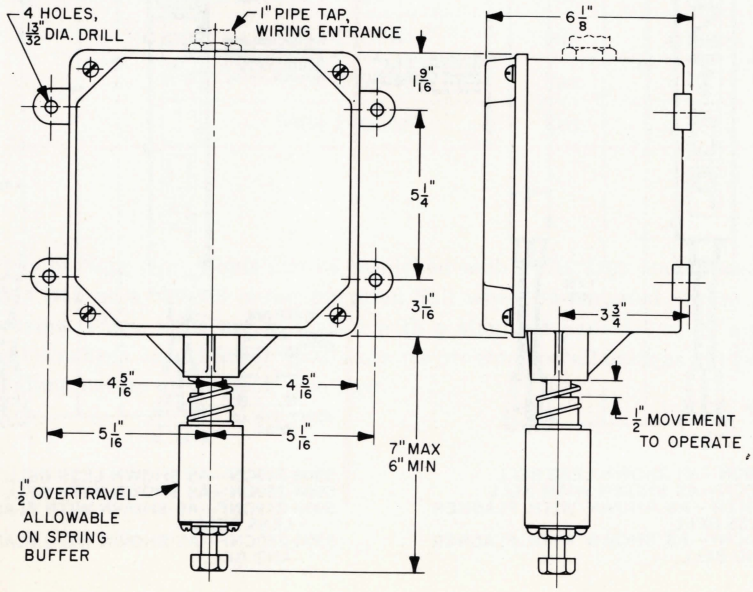

NEON STOP SIGNS

TYPE SL-50-CN

Widely used in conjunction with warning signals and is designed to offer the best advance warning. It is visible in daylight as well as in the night and provides effective visibility in foggy atmosphere. The red neon letters are of the double 1/2" tube type and are wired to two separate transformers so that the word "STOP" will be illuminated with a single tube if either of the two transformers or line of tubes have a failure. Under normal conditions, both tubes are illuminated. The neon tubes and transformers are mounted on a 1/2" thick ebony asbestos panel which is hinged for servicing, all of which is housed in a 1/8" thick welded steel box with a hinged door. The door is glazed with polished wire glass and sealed with a non-hardening plastic compound. Flashers, when specified, are installed in the housing.

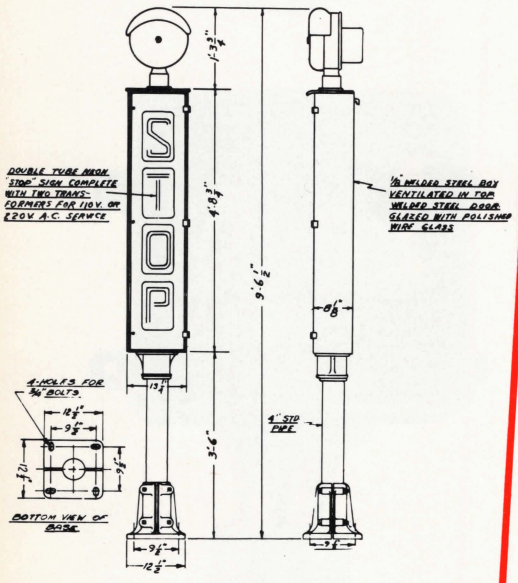

5904-49AN—AS SHOWN LESS BELL
5904-50AN—AS SHOWN WITH BELL
5904-49ANF—AS SHOWN WITH FLASHER LESS BELL
5904-50ANF—AS SHOWN WITH FLASHER AND BELL

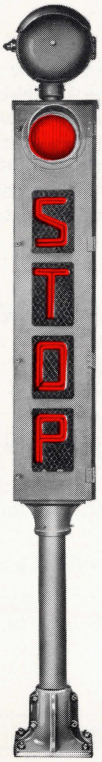

TYPE SL-50-CN-1

Similar to the Type SL-50-CN except with the addition of a 8 3/8" diameter 30 degree spread light unit with red or green roundel incorporated above the neon light. This roundel is lighted with medium screw base, 60 or 67 watt traffic signal lamp bulb.

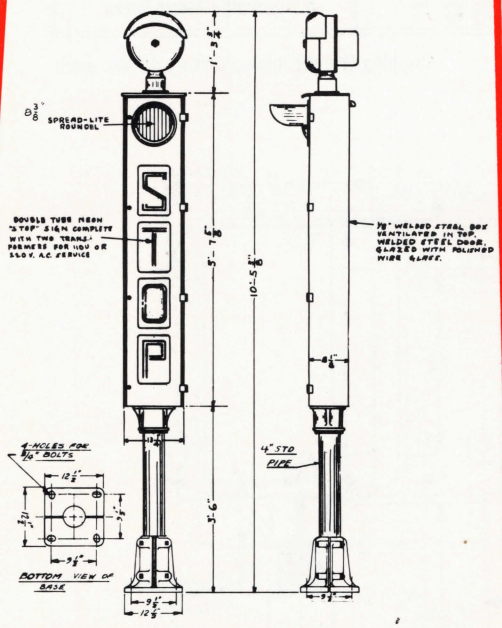

5904-49CN—AS SHOWN LESS BELL
5904-50CN—AS SHOWN WITH BELL
5904-49CNF—AS SHOWN WITH FLASHER LESS BELL
5904-50CNF—AS SHOWN WITH FLASHER AND BELL

TYPE SL-50-CN-2

Also similar to the Type SL-50-CN, with the addition of two 8 3/8" diameter 30 degree spread light units which can be red and green roundels, or as specified. Two red roundels can be used and arranged to flash alternately.

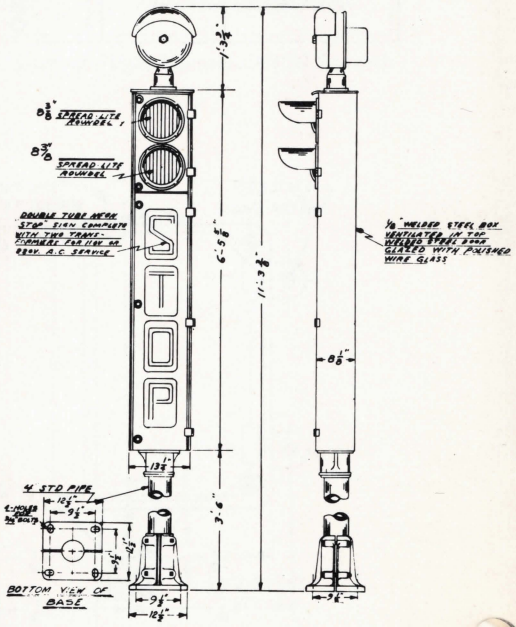

5904-249CN—AS SHOWN LESS BELL
5904-250CN—AS SHOWN WITH BELL
5904-249CNF—AS SHOWN WITH FLASHER LESS BELL
5904-250CNF—AS SHOWN WITH FLASHER AND BELL

AND TRAFFIC LIGHTS

Bridge Approach Warning for Vehicle and Pedestrian Safety

It is experience that builds the quality equipment which assure reliable operation in all types of weather conditions. It is obvious considerations of quality from design right on through manufacture which give Western Traffic Light and Neon Stop Signs their winning edge over other makes. Western's experience, with emphasis on quality control, are recognized as the wisest investment choice, as proved in numerous installations throughout the U. S. and Canada. Requiring little maintenance, they are built for years of trouble-free service.

You have a wide range in selecting the type of equipment most suitable for your particular bridge approach location, as shown in the following specifications:

TYPE	MODEL	EQUIPMENT	
		Flasher	Bell
SL-50-CN	5904-49AN	No	No
	5904-50AN	No	Yes
	5904-49ANF	Yes	No
	5904-50ANF	Yes	Yes
SL-50-CN-1	5904-49CN	No	No
	5904-50CN	No	Yes
	5904-49CNF	Yes	No
	5904-50CNF	Yes	Yes
SL-50-CN-2	5904-249CN	No	No
	5904-250CN	No	Yes
	5904-249CNF	Yes	No
	5904-250CNF	Yes	Yes

All types of Neon Stop Signs can be furnished with a No. 1203 magnetically operated Bell or a No. 555 motor operated Bell which is mounted on top of the housing. These units are furnished with a standard pedestal of 4″ pipe and cast iron base. Insect-proof ventilators are provided on all units as another outstanding feature of the neon stop sign.

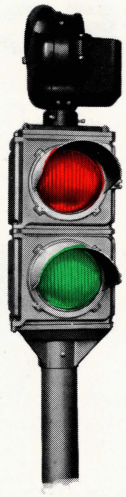

TYPE SL-50 TRAFFIC LIGHT

Constructed of cast aluminum and can be furnished in a one, two, or three light unit, with one way or two way indications. Reflectors and lamp receptacles are for medium screw base, 60 or 67 watt traffic signal lamp bulbs, and are pre-focused at the plant to give the maximum brilliancy through the 8³/₈″ diameter, 30 degree spread light colored roundel. Flashers are installed, when specified, in the housing, and are adjusted so that there will be no over-lapping of the alternate flashing light circuits. The traffic light can also be furnished with a No. 1203 magnetically operated or a No. 555 motor operated bell, which is mounted on top of the light unit. The special feature of the Type SL-50 Traffic Light is the hinged doors to be used for relamping or servicing.

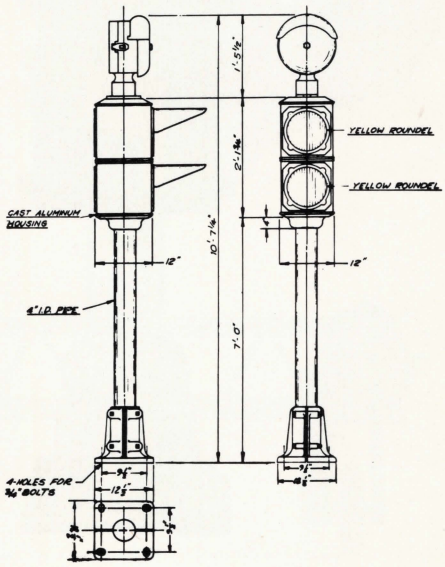

WESTERN'S SPECIAL MODEL XT-1500

TRAFFIC CONTROL SIGNAL

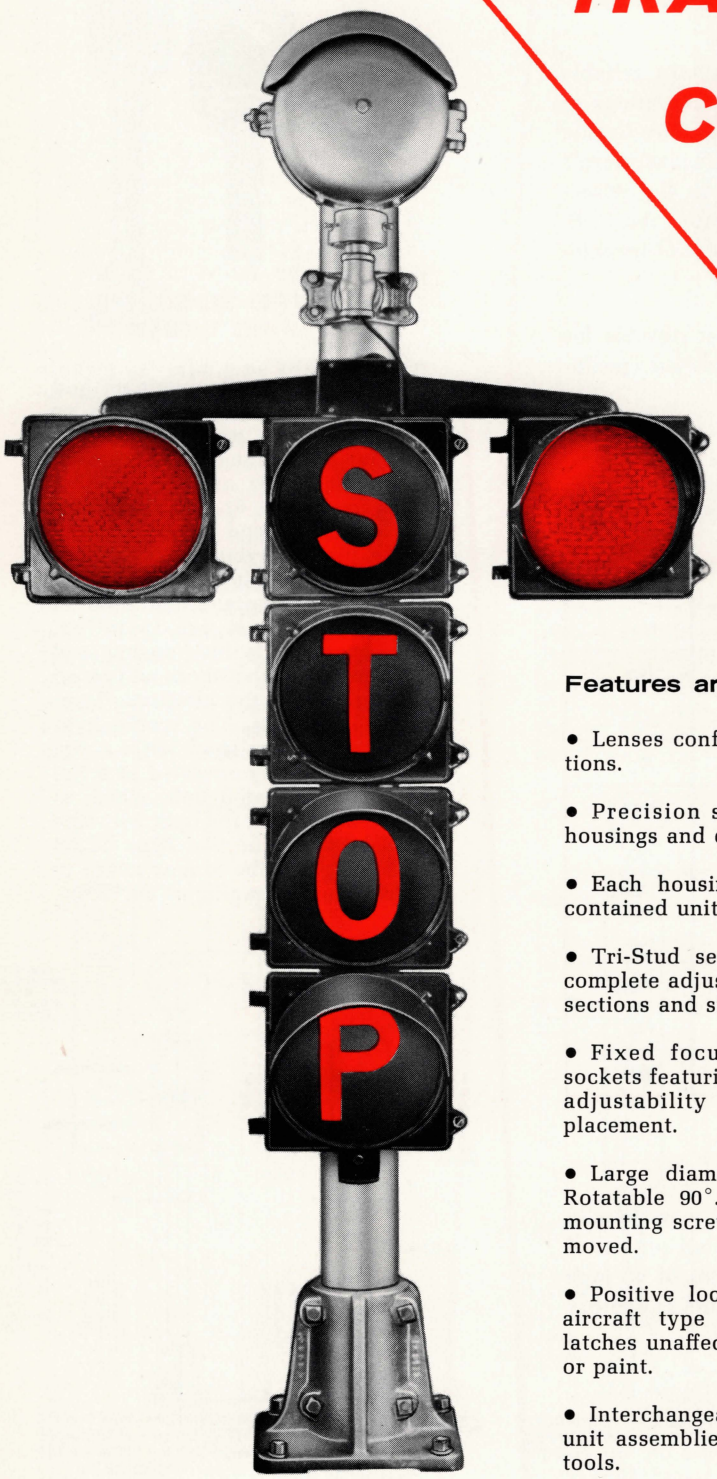

The finest flashing light ever made: *Six 100 watt floodlight bulbs, Alzak mirrored reflectors and 12-inch glass roundels* give the Model XT-1500 many times the attention value of the ordinary flashing light.

Features are:

- Lenses conform to ITE specifications.
- Precision sand cast aluminum housings and doors.
- Each housing a complete, self-contained unit.
- Tri-Stud section connectors for complete adjustability of individual sections and signal heads.
- Fixed focus Spring-Lok lamp sockets featuring exclusive fingertip adjustability for proper filament placement.
- Large diameter oversize visors. Rotatable 90°. Bayonet slotted so mounting screws need never be removed.
- Positive lock and quick release aircraft type Dzus fastener door latches unaffected by corrosion, ice or paint.
- Interchangeable door and optical unit assemblies removable without tools.
- Alzak mirrored reflectors mounted in signal section on rigid cast aluminum supports.
- Molded Neoprene lens-reflector gasket, soft Neoprene door gasket.
- Stainless steel hinge pins.
- All wiring completely color-coded and spade connected to marked terminal strip.

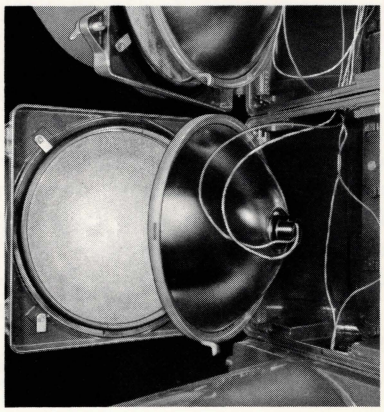

- Available in dark green, Federal yellow or black enamel.

MOTORIZED HORIZONTAL SWING BARRIER

Designed, primarily, for use at Airports and on roadways where the span is at least 40 feet...

Prevents Vehicles from Entering Aircraft Right-of-Way

Safeguard. Combining length, strength, illumination and mechanization, the Type 8500 Motorized Horizontal Swing Barrier is designed, primarily, for use at airports to prevent vehicle traffic from entering the aircraft right-of-way.

Automatically Controlled. This original and unique swing barrier can be automatically actuated by the entering aircraft or from a central control point by push-button.

Simplified Operation. One end of the barrier is emplaced on a pivot at the side of the roadway; the other end swings into position, upon actuation, powered by an enclosed, weatherproof, gear-head motor.

Built to Your Requirements. This barrier is especially suited to uses where the span to close is 40 feet or more. If you are interested in a specific application, please write to us giving the details.

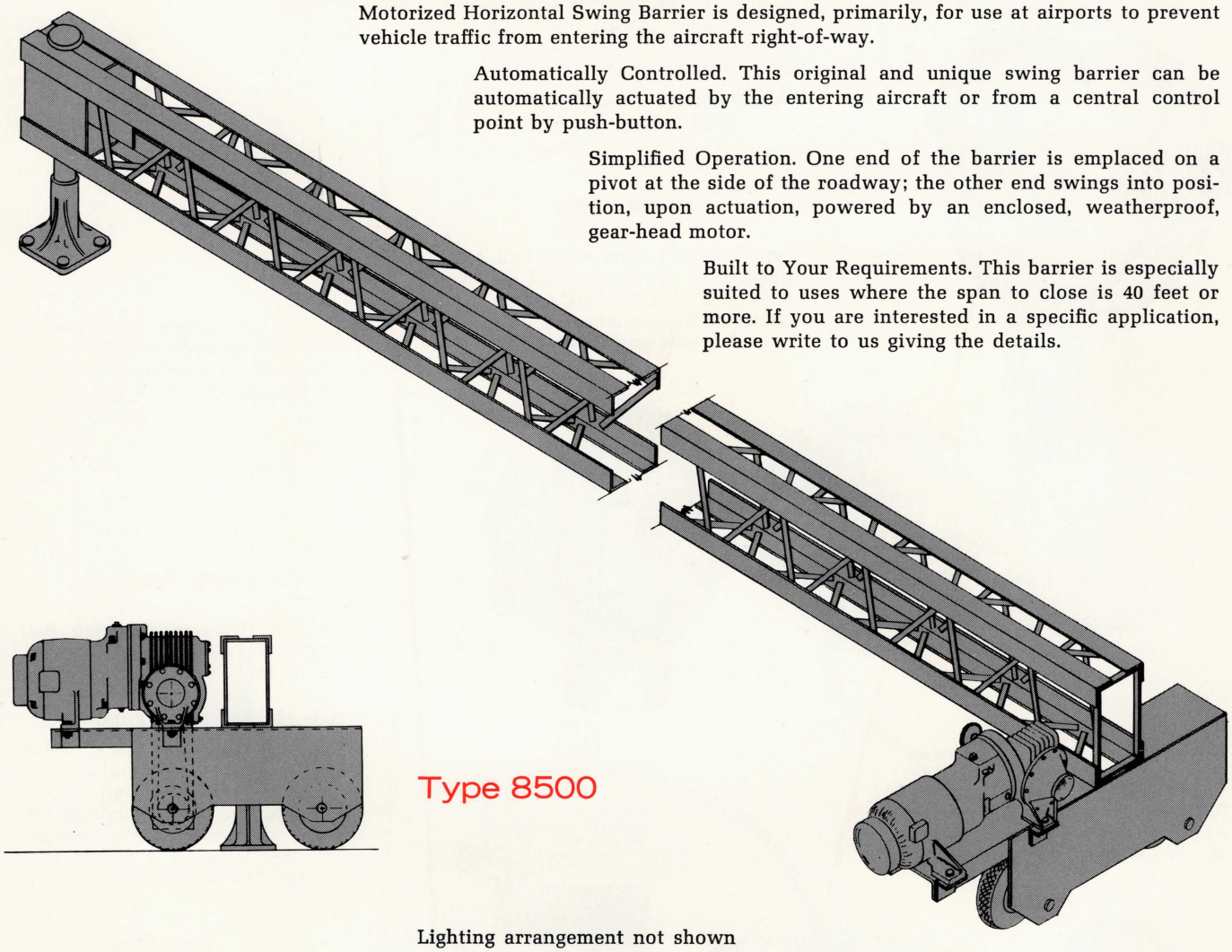

Type 8500

Lighting arrangement not shown

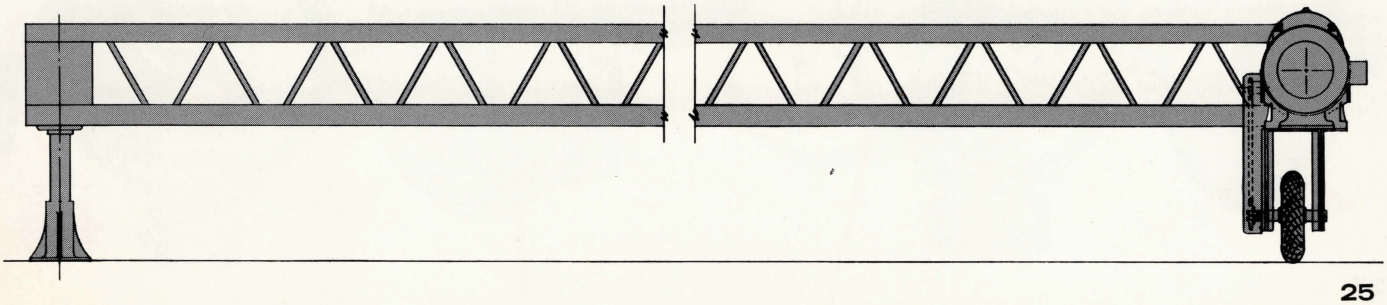

WESTERN INDUSTRIES ELECTRIC BELLS

Western Industries Electric Crossing Bells are world famous for reliability, clear resonant tones, and long life. Tens of thousands of Western's bells are in service at highway-railroad grade crossings and on highway bridges. Western's bells are also extensively used for audible warnings in industrial plants, shipyards, and other places.

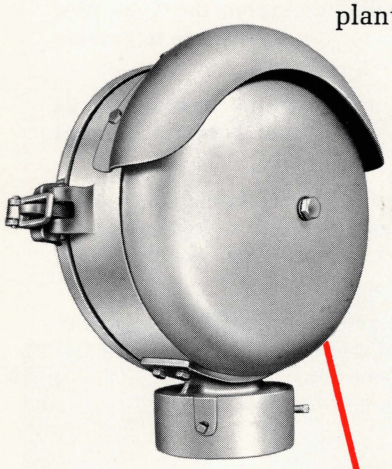

Aluminum housings with bell steel gongs!

TYPE 1203

Type 1203 Bell same as 222 Bell, but adapted to operate on 115 or 230 volts A.C. commercial source by means of transformer and rectifier, housed in enlarged cover.

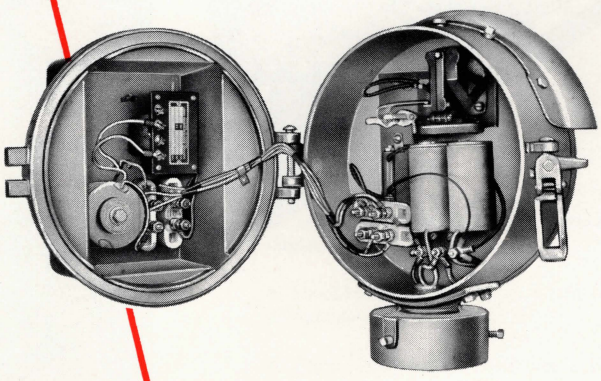

TYPE 222

Type 222 Bell for operation on 6 to 600 volts D.C., 12 inch steel gong. Approximately 200 strokes per minute. Lightweight: aluminum housing.

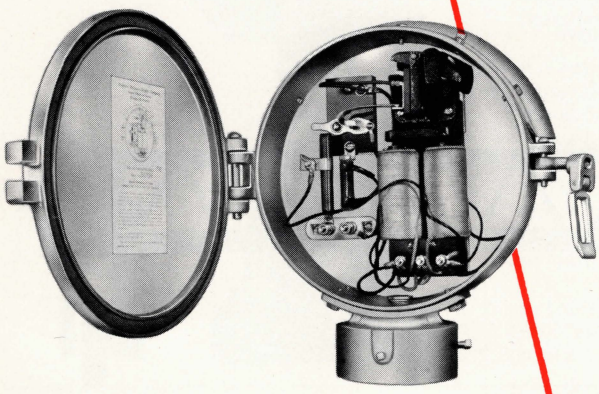

TYPE 555

Type 555 Highway Crossing Bell MOTOR DRIVEN — GONG TYPE, for 6 to 250 volts D.C., 115 or 230 volts A.C., 25 or 60 cycles. Approximately 112 strokes per minute.

The Type 555 Gong-Type Crossing Bell is of the same general appearance as the Type 222 Bell, except that the hinged cover is enlarged to enclose the motor-driven mechanism, consisting of a motor, gear train, and bell hammer.

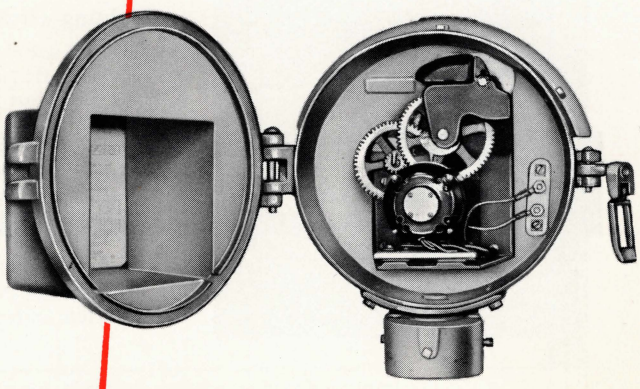

GATE ARM LIGHTS

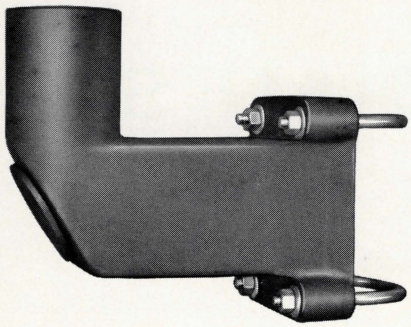

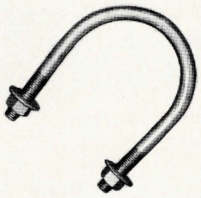

Type 873 Gooseneck Bracket is designed to mount bell on side of pipe with "U" bolts—or on steel structure or flat wall with through bolts or cap screws.

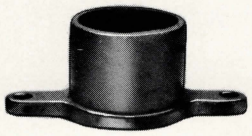

Type 216-3 Adapter is used to mount bell on top of gate housing or on other flat horizontal surfaces.

SWIVEL TYPE GATE LIGHT TYPE 1580-51B

Overall Dimensions: $7^{3}/_{4}$ inches x $4^{1}/_{8}$ inches. Cast aluminum housing, 360° red fresnel lens, 30° clear spread lens, porcelain socket with medium screw base. Bulb not furnished.

FIXED GATE LIGHT TYPE 1565-20M

Overall Dimensions: 7 inches x $3^{7}/_{16}$ inches. Cast aluminum housing, red globe, porcelain socket with medium screw base. Bulb not furnished.

Both lights require a 25 watt A-19 medium screw base bulb.

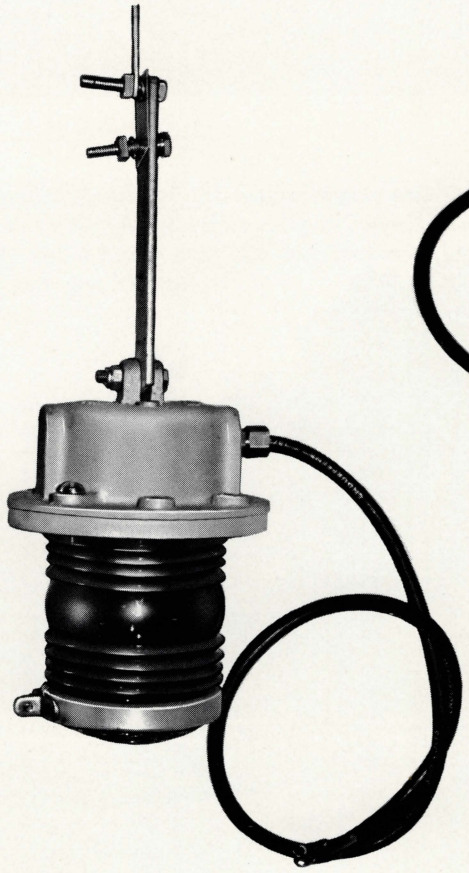

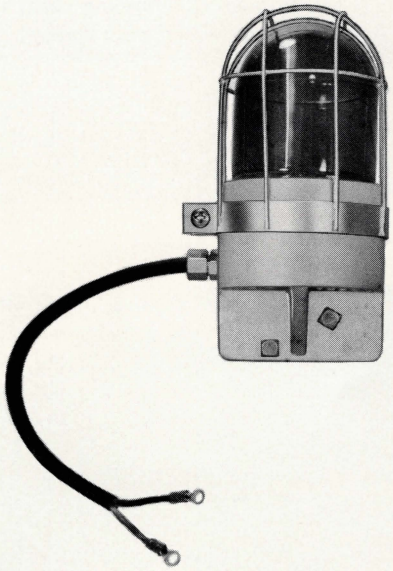

WESTERN INDUSTRIES

MODEL NN MEDIAN STRIP

Western's NN Median Strip Crossover Control Gates allow authorized cars, such as police and emergency vehicles access to median strip crossover, while preventing unauthorized vehicles use of crossover.

The photos show a median strip crossover installation, one of fifteen, located along Maryland's Northeast Expressway, from Baltimore to the Delaware state line.

Gate is opened through radio control transmitter, located under dashboard in 42 vehicles in State Police, tow trucks and other emergency vehicles, effective within 500 foot range of a gate. Closing is automatic, following short time delay. This installation has a Model 5915-NN4 gate, with a 16-foot gate arm, which runs through the full 90 degrees of travel in 4 seconds.

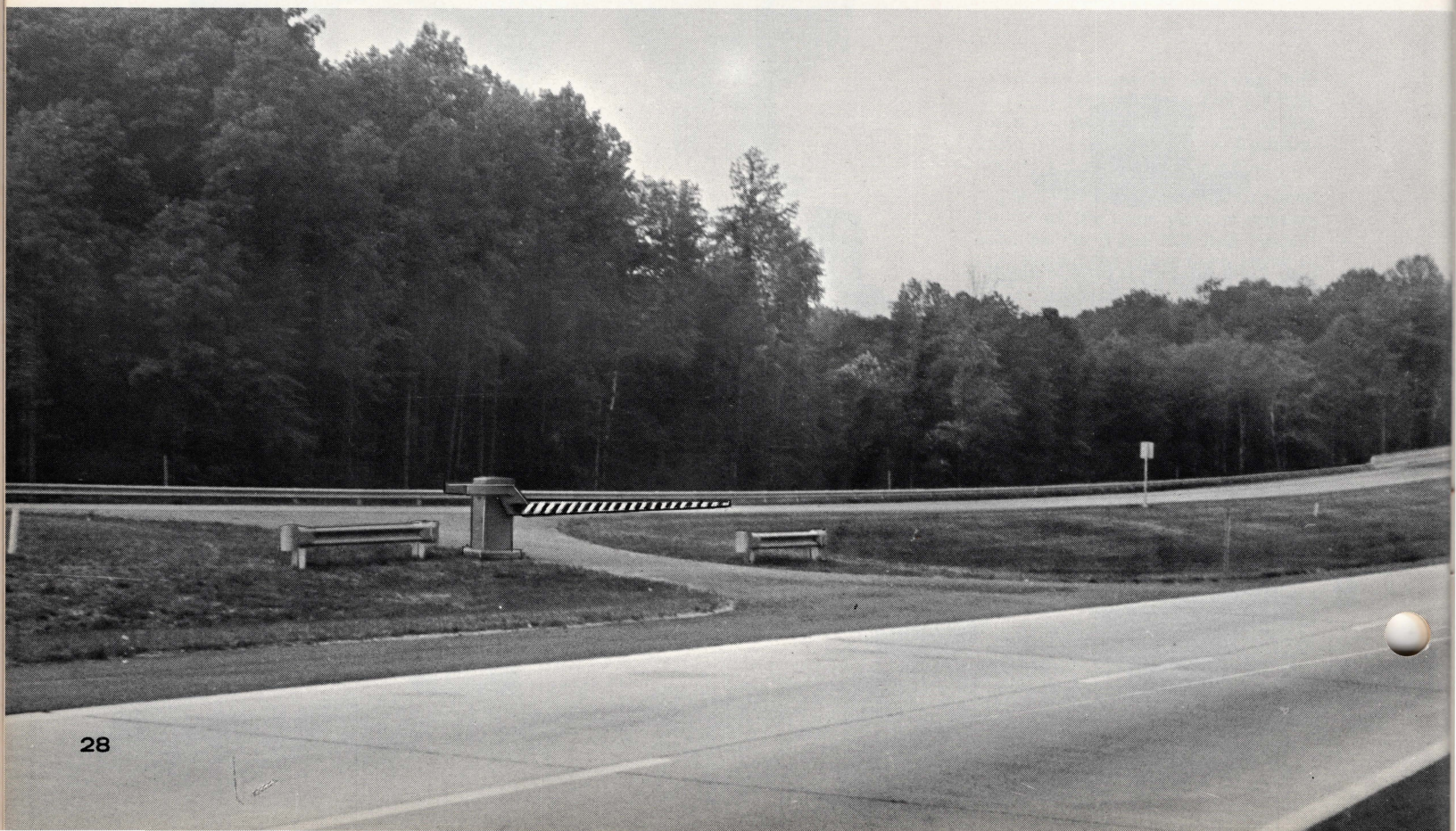

CROSSOVER CONTROL GATES

Available in six standard models, based on the length of gate arm required, with operational time ranging from 4 to 13 seconds to either raise or lower the gate arm. These six models include: 3 light duty and 3 heavy duty gate mechanisms, classified with respect to their operating time and gate arm length:

LIGHT DUTY

Model	Time	Motor	Max. Arm Length
5915-NN4	4 sec.	½ h.p.	16 ft.
5915-NN7	7 sec.	½ h.p.	18 ft.
5915-NN9	9 sec.	½ h.p.	23 ft.

HEAVY DUTY

Model	Time	Motor	Max. Arm Length
5920-NN9	9 sec.	½ h.p.	30 ft.
5920-NN11	11 sec.	½ h.p.	35 ft.
5920-NN13	13 sec.	¾ h.p.	50 ft.

When writing for estimates and blueprints, please give us the following information:

A. Electric service available for motor—D.C. or A.C.—voltage—frequency—number of phases.
B. Length of Roadway Arm to be used (or width of pavement).
C. Length of Sidewalk Arm, if required.
D. Angle of arm travel, if other than 90°.
E. Number of warning lights required on Roadway Arm.
F. Whether or not a bell is required for audible warning.
G. Are special circuits required through limit switch?
H. Type of manual or remote control desired.

EXPRESSWAY REVERSIBLE

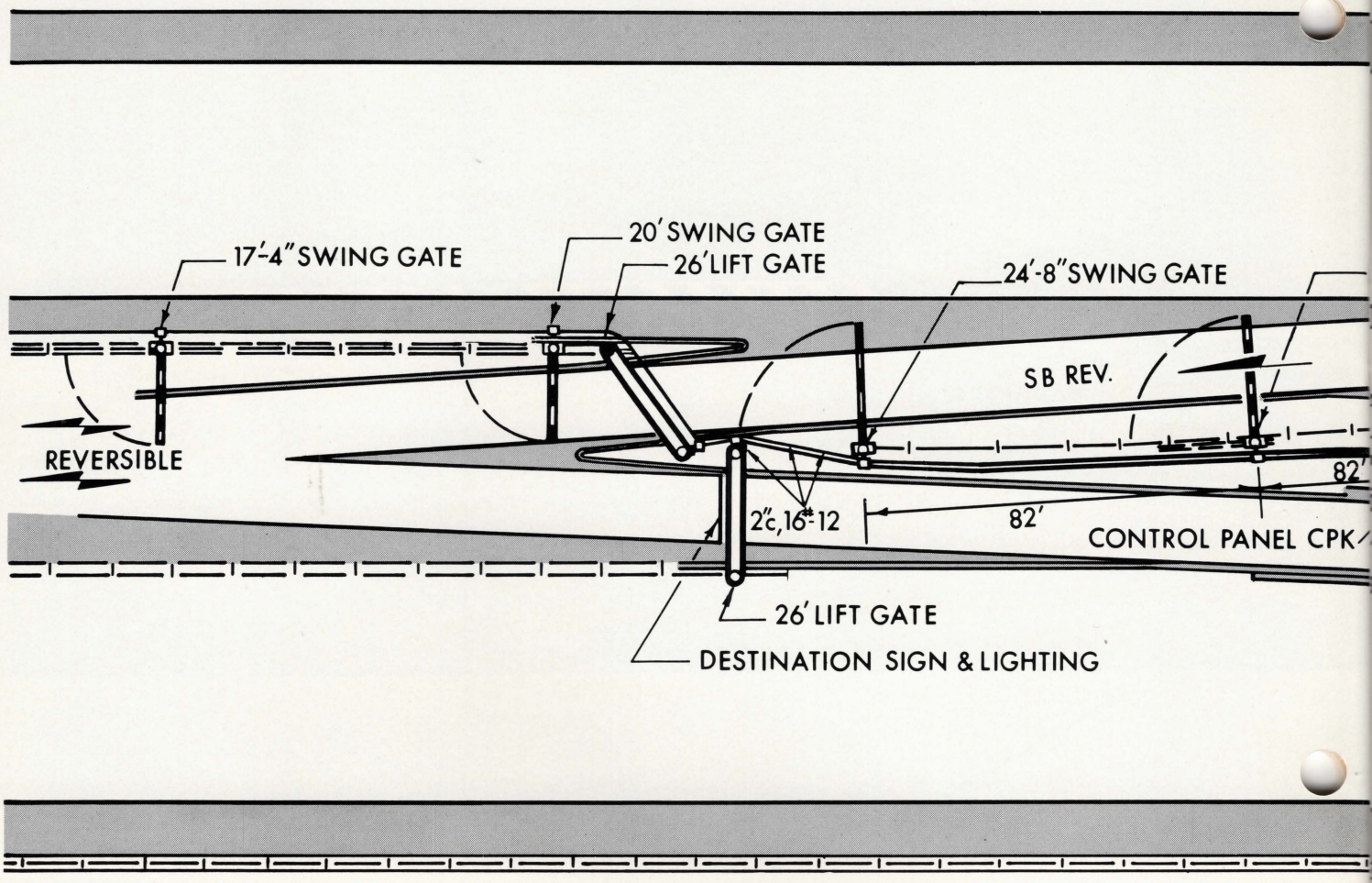

Provide Safe, Simplified Lane Control

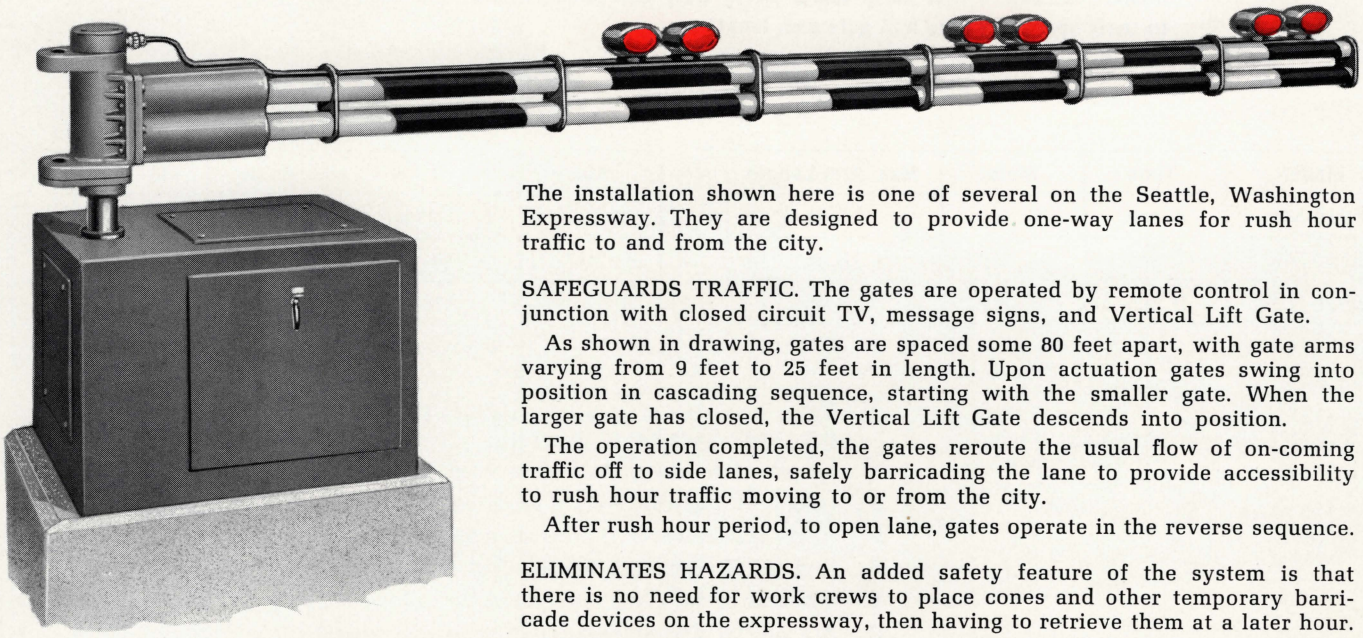

TYPE 6200

The installation shown here is one of several on the Seattle, Washington Expressway. They are designed to provide one-way lanes for rush hour traffic to and from the city.

SAFEGUARDS TRAFFIC. The gates are operated by remote control in conjunction with closed circuit TV, message signs, and Vertical Lift Gate.

As shown in drawing, gates are spaced some 80 feet apart, with gate arms varying from 9 feet to 25 feet in length. Upon actuation gates swing into position in cascading sequence, starting with the smaller gate. When the larger gate has closed, the Vertical Lift Gate descends into position.

The operation completed, the gates reroute the usual flow of on-coming traffic off to side lanes, safely barricading the lane to provide accessibility to rush hour traffic moving to or from the city.

After rush hour period, to open lane, gates operate in the reverse sequence.

ELIMINATES HAZARDS. An added safety feature of the system is that there is no need for work crews to place cones and other temporary barricade devices on the expressway, then having to retrieve them at a later hour.

This system offers wide flexibility for most any application of expressway lane control. If you would like further information, please write to us outlining your need. (For information on Vertical Lift Gate, see page 32.)

LANE CONTROL SWING GATES

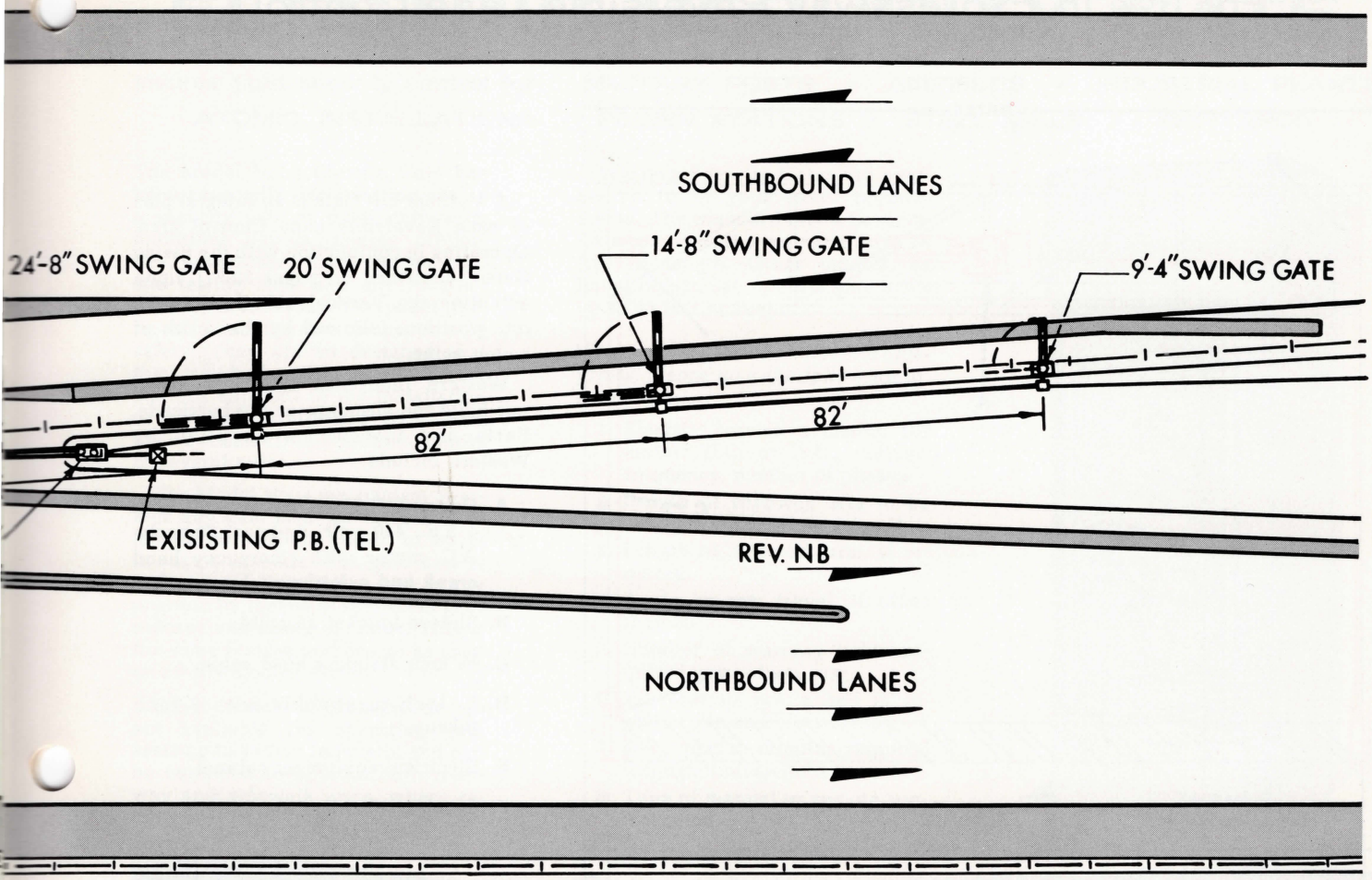

VERTICAL LIFT GATE

For use in Expressway Reversible Lane Control

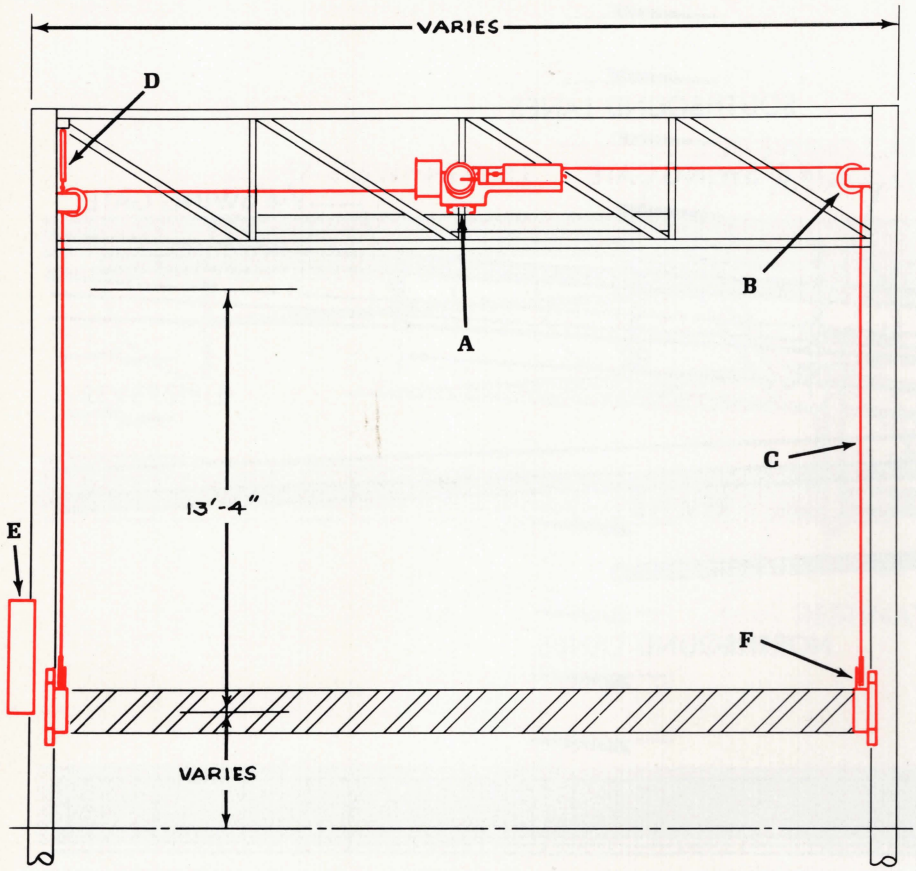

A Vertical Lift Gate is an integral part of each Reversible Lane Control area. Operating in conjunction with the Swing Gates (described on pages 30-31), upon actuation the Vertical Lift Gate moves into position, followed by the series of swing gates.

Western Industries does not design nor build the structure or the barricade. Parts and mechanism supplied by Western include:

A. Heavy Lift Hoist mechanism with 4 h.p., 440 volt, 3-phase, 60-cycle, A.C. motor with emergency hand crank and safety switch.

B. Sheave bracket assembly.

C. 3/8 inch stainless steel cable.

D. 3/4 inch turnbuckle with 9 inch takeup.

E. Electrical equipment cabinet.

F. Track mechanism assembly.

Hoist Specifications:

Model: Heavy Lift

Catalog No.: 220 B 416

Capacity: 2,000 lbs.

Maximum Lift: 13 feet, 4 inches

Control: Single speed

Hoisting Speed: 60 f.p.m.

Limit Switch: 10 circuit, gear driven

Cable Drum: Grooved for two sets of 3/8 inch (7 x 9) stainless steel cable lead off horizontal in opposite directions.

The above listed equipment was required, in addition to the Vertical Lift Gates and Swing Gates, for each of the eight installations of the Seattle Expressway system. These specifications might vary for other needs; for further information please write us and describe your requirement.

WESTERN INDUSTRIES ELECTRIC SECURITY GATE

Insures tight security control for MILITARY POSTS • AIRFIELDS • INDUSTRIAL PLANTS ATOMIC INSTALLATIONS • POWER STATIONS • STEEL MILLS • SHIPYARDS

The Model NN-4 Electric Gate has been especially designed for use as a security gate at plant entrances, munitions depots, mining properties, government firing ranges, missile testing sites and any location where it is necessary to control traffic for identification, inspection or safety. They are so designed that they may be locally controlled from stations adjacent to the installation or remotely controlled over wire lines or cable circuits from distances of several miles.

The Model NN-4 mechanism operates any gate arm, up to 16 feet in length, through the full 90° of travel in just 4 seconds. The gate arm is locked in place when at rest in any position by means of the worm gear reducer and crank operator. This is the same feature and design as used on all NN Electric Gates.

Other models of identical design are available for operating gate arms up to 45 feet in length, and can be equipped to operate both roadway and sidewalk arms, where required.

Western Security Gates are engineered to fit your exact requirements. The standard NN-4 Security Gate can operate a gate arm up to 16 feet in length. Other models, as listed below, can operate gate arms up to 45 feet in length.

When writing for estimates and blueprints, please give the following information:

1. Electric service available for motor: D.C. or A.C., voltage, frequency, number of phases.
2. Length of roadway arm to be used (or width of pavement).
3. Length of sidewalk arm, if required.
4. Angle or arm travel, if other than 90°.
5. Number of warning lights required on roadway arm.
6. Whether or not a bell is required for audible warning.
7. Are special circuits required through limit switch?
8. Type of manual or remote control desired.

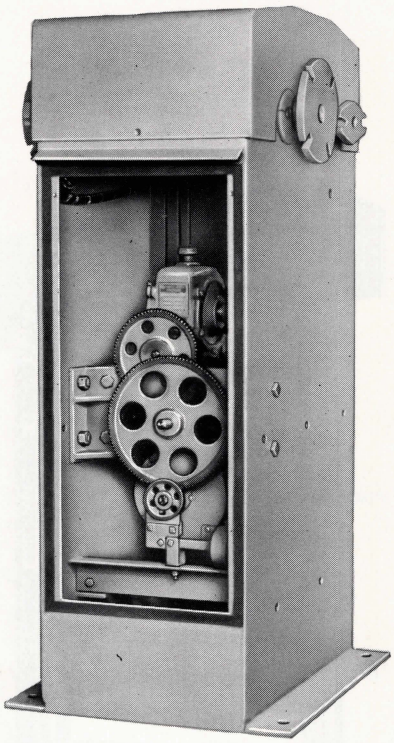

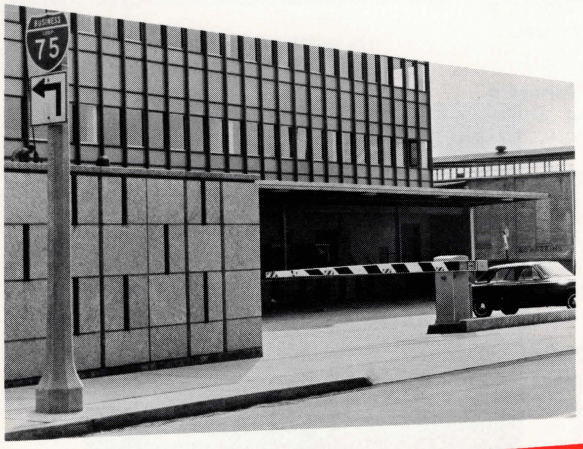

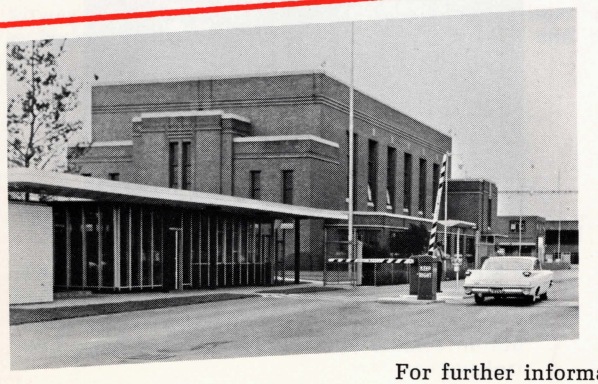

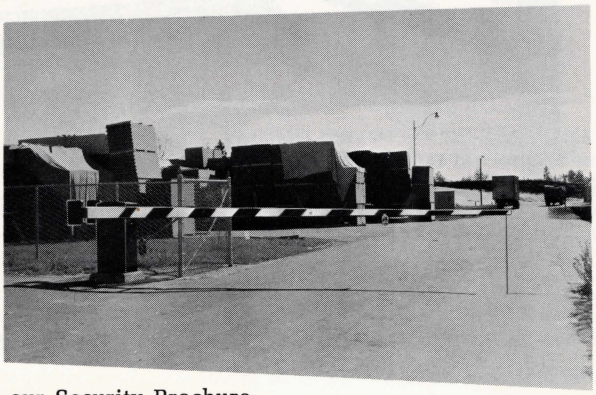

For further information send for our Security Brochure

WESTERN SECURO-

EFFECTIVE PASSAGE CONTROL for Bus and Zoological Gardens, Race Tracks, Fair Grounds, Municipal, Industrial, and

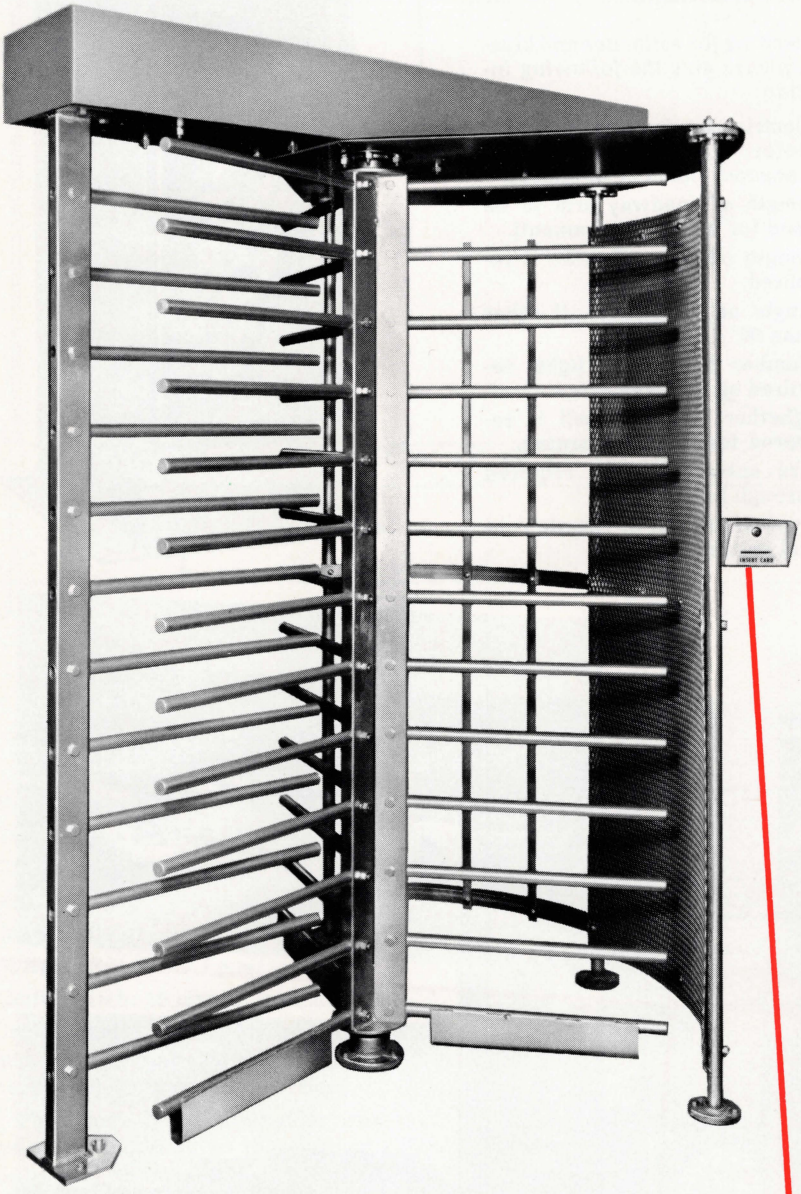

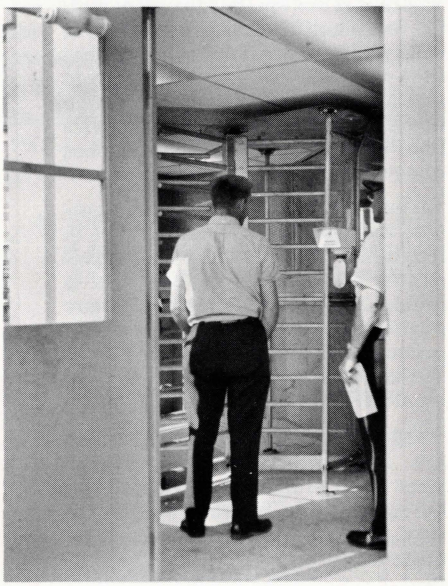

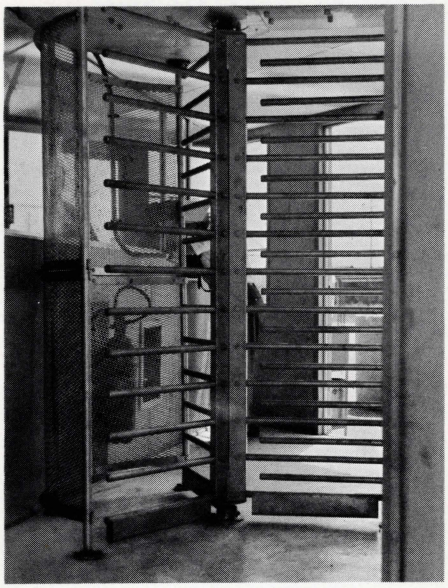

Securo-Gate Turnstiles

2 Mechanical models for free passage. 3 Electric Unlock and 3 Fail Safe models for controlled passage, using coin pay-in mechanism, push-button, remote switch or Guard-Kard Entry Control system.

GATE TURNSTILES

Rapid Transit Stations, Swimming Pools, Stadiums, Amusement Parks, Parking Lots and numerous Commercial applications.

3 BASIC TYPES OF OPERATION:

Mechanical • Electric Unlock • Fail Safe

8 Models

Mechanical:

For *free passage,* single direction only, right or left hand operation:

- Model T-7500 MR — Right hand operation only.
- Model T-7500 ML — Left hand operation only.

Electric Unlock:

For *controlled passage* in either single or double direction:

Single Direction Gate: Available in right hand or left hand operation with controlled travel in *one direction only.*

Double Direction Gate: Controlled travel in both directions.

- Model T-7500 SR—Single Direction, *right hand operation.*
- Model T-7500 SL—Single Direction, *left hand operation.*
- Model T-7500 SD—Double Direction.

Power failure will cause these units to *lock in the closed position.*

Fail Safe:

For *controlled passage* in single or double direction.

Single Direction Gate, available in *either right or left hand operation*—permits controlled travel in one direction only.

Double Direction Gate—permits controlled travel in *both directions.*

- Model T-7500 FSR—Single Direction, *right hand operation.*
- Model T-7500 FSL—Single Direction, *left hand operation.*
- Model T-7500 FSD—Double Direction.

Power failure will cause these units to *run free.*

Electric Unlock and Fail Safe types are designed for actuation by pay-in coin mechanism, push button switch, remote switch or Guard-Kard Entry Control system. They can be used in conjunction with the closed circuit, TV and other electronic controls.

SPECIFICATIONS:

General Construction:

Rugged all steel construction.
Hot zinc dipped. Other finishes are also available.

Dimensions:

Height — overall — 7′ 5½″
Width — crosswise — 5′ 5″
Width—in direction of travel—4′ 9″
User's passage space — 28½″

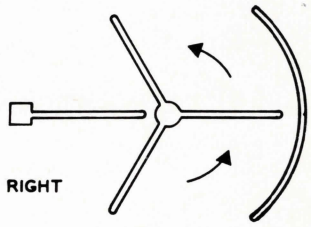

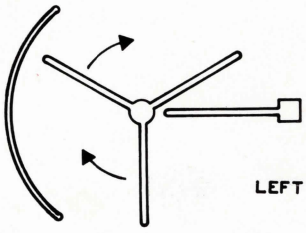

GUARANTEE:

Western Industries, Inc., guarantees to the purchaser that the equipment is free from defective workmanship or material under normal use and service for a period of one year from date of shipment.

A single turnstile or a completely integrated "Securo-Gate" Turnstile system can be engineered and built for your needs.

Write us outlining your requirements.

WESTERN
INDUSTRIES, INC.

2742 West 36th Place, Chicago, Illinois 60632

Form TC-NA 565

5M Printed in U.S.A.

WESTERN
INDUSTRIES, INC.

2742 West 36th Place, Chicago, Illinois 60632

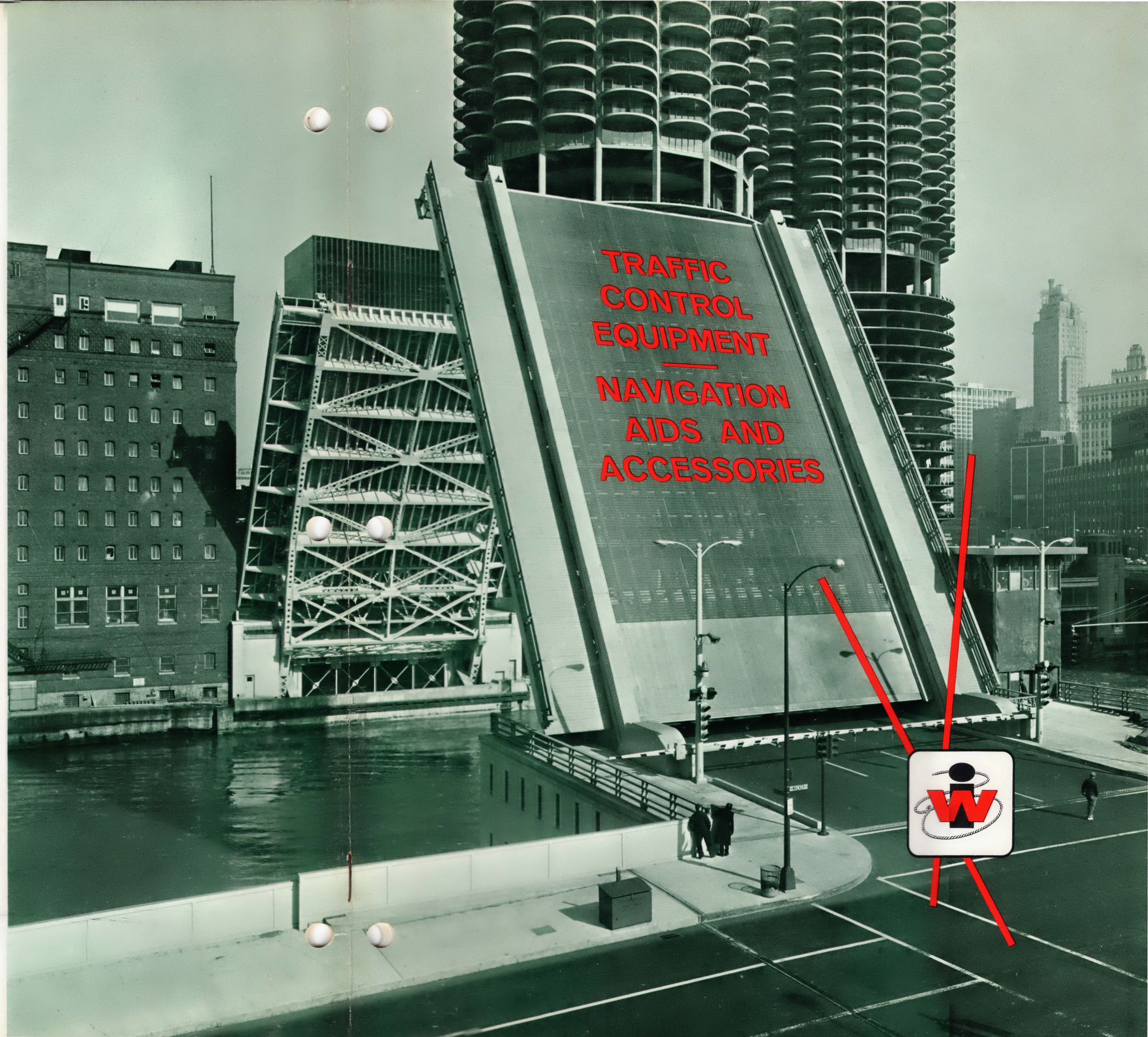

TRAFFIC CONTROL EQUIPMENT
NAVIGATION AIDS AND ACCESSORIES